STEREO DOUBLE AUTO REVERSE CASSETTE DECK

X-711

SERVICE MANUAL

KENWOOD

©1990-5 PRINTED IN JAPAN
B51-4169-00(S)3103

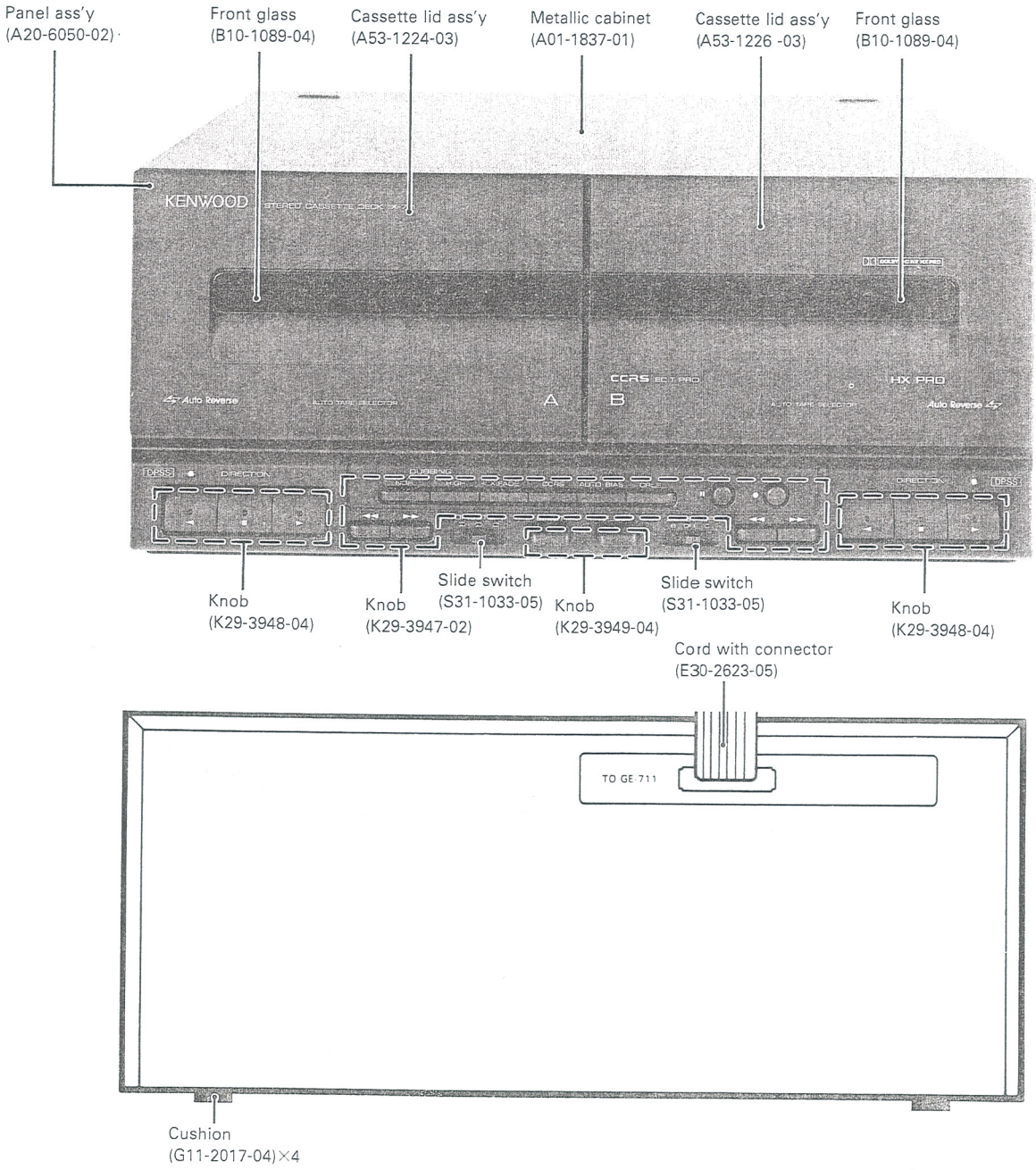

Cautions during repair work

Power to the X-711 is supplied from the A-711 and GE-711. Thus, the A-711 and GE-711 or a dedicated jig and tool are required during repair work.

CONTENTS

NAMES OF FUNCTION 3
BLOCK DIAGRAM 4
DISASSEMBLY FOR REPAIR 5
CIRCUIT DESCRIPTION 6
MECHANISM OPERATION DESCRIPTION 22
ADJUSTMENT 30
REGLAGE 32
ABGLEICH 33
WIRING DIAGRAM 34
PC BOARD 35
SCHEMATIC DIAGRAM 37
EXPLODED VIEW (MECHANISM) 41
EXPLODED VIEW (UNIT) 42
PARTS LIST 43
SPECIFICATIONS ..... Back cover

CONNECTIONS

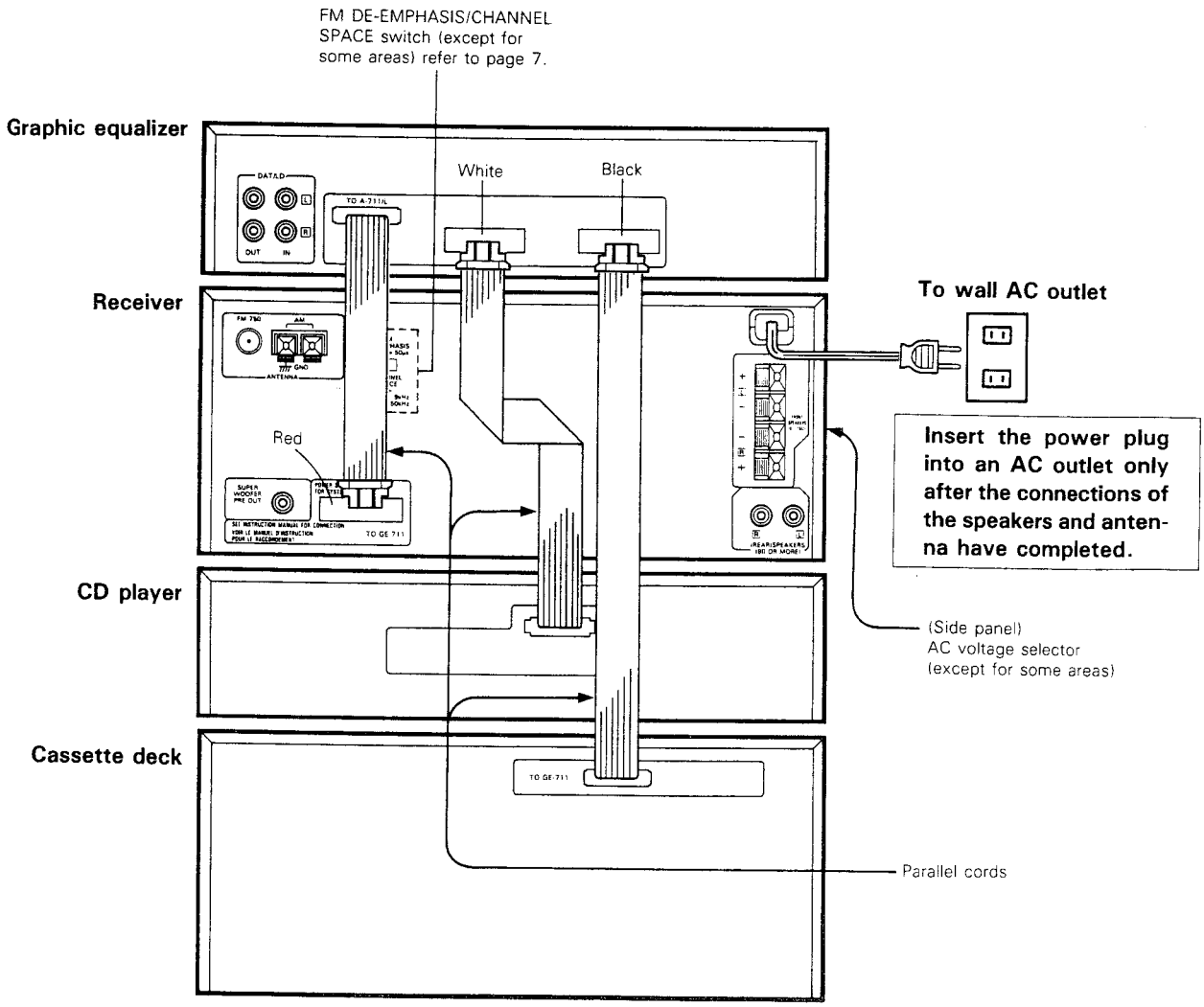

NAMES OF FUNCTION

■ Cassette deck

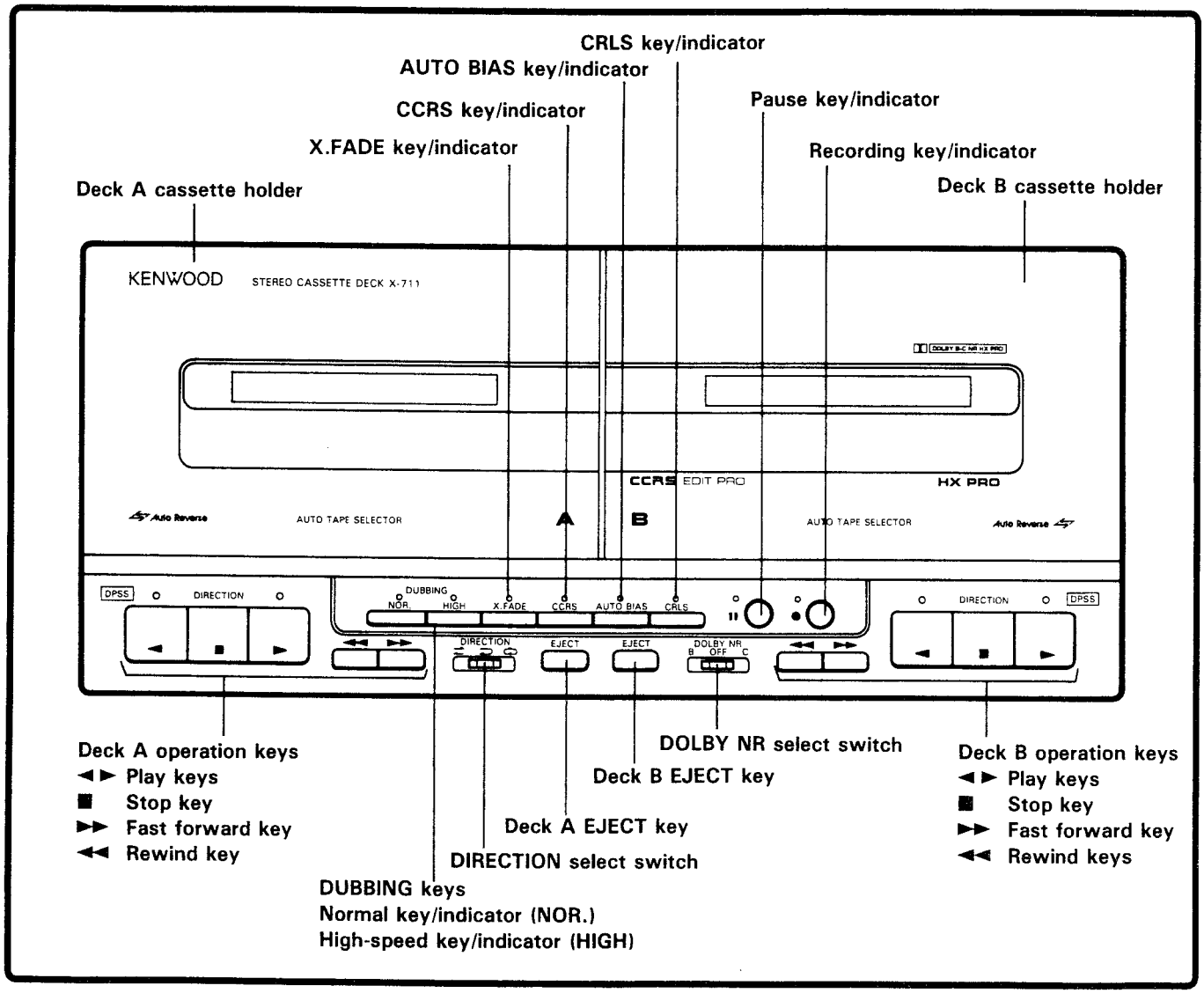

BLOCK DIAGRAM

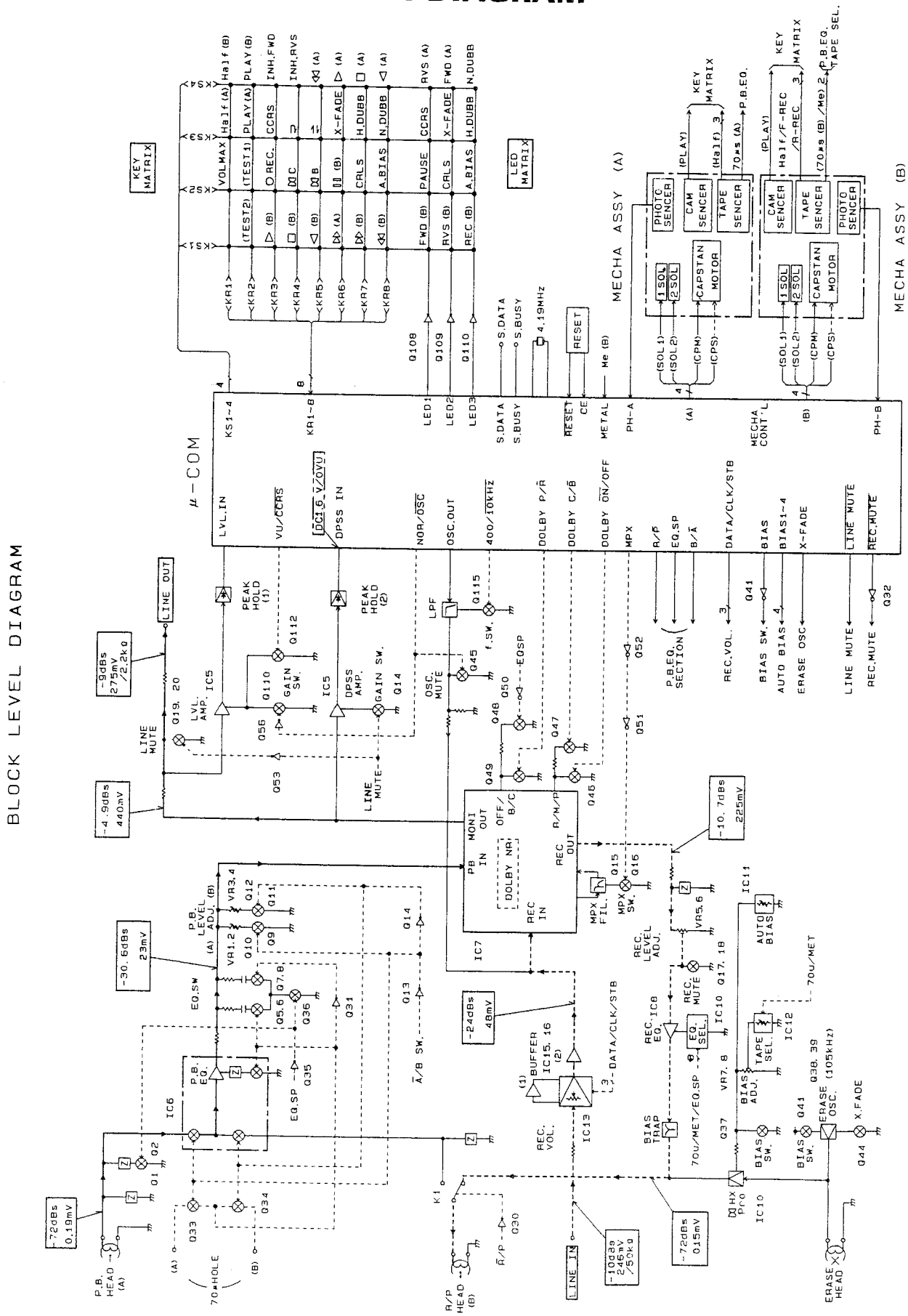

DISASSEMBLY FOR REPAIR

1. Remove the four screws from the underside of the unit ❶, then detach the front panel.
   Press the EJECT button to open the cassette holder, then press the hooks on the lid of each cassette holder with a screwdriver, and remove the lids.

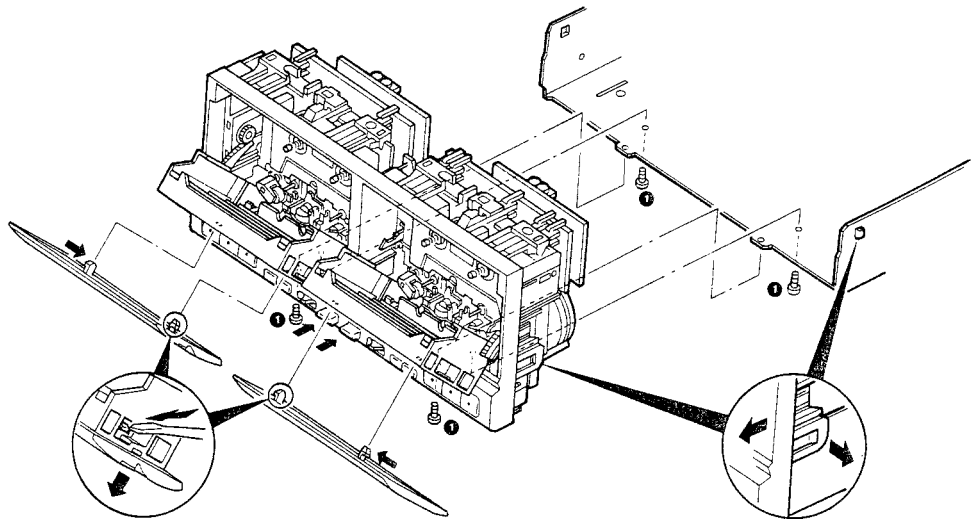

2. Remove the eight screws ❸ and detach the main cassette mechanisms.

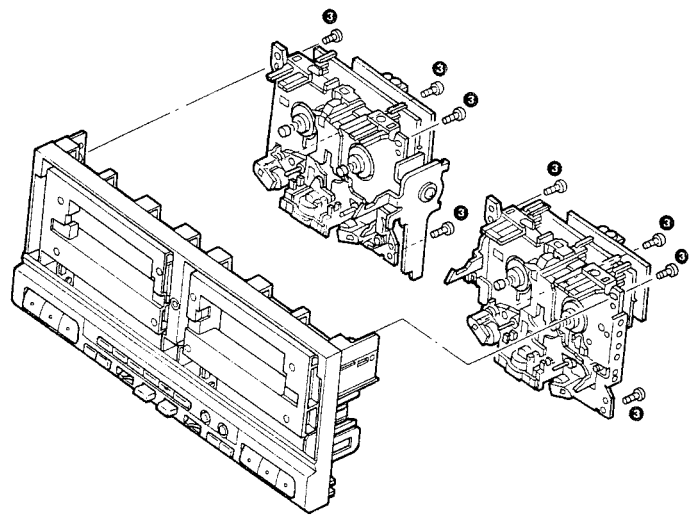

※ When attaching a microcomputer PC board to the Main PC board, there are a large number of connections which must be made. Make sure that every connector is properly attached.
Also, the connection procedure will be simplified if a flat board is placed under the main PC board while making the connections.

CIRCUIT DESCRIPTION

RECORD/PLAYBACK AMPLIFIER UNIT (X28-2190-00)

Ref. No.	Name	Function	Description
Q1, 2	2SC1740S(Q, R) 2SC945(R) (Q, P)	Deck A playback high-frequency compensation selection during 2 × dubbing	Off during 2 × dubbing and on in modes other than 2 × dubbing.
Q5, 6	DTC124ES	Time constant selection at twice normal speed	On for 70 µs and off for 120 µs.
Q7, 8	DTC124ES	Time constant selection at twice normal speed	Off for 70 µs and 120 µs.
Q9~12	2SC1740S(Q, R) 2SC945(R) (Q, P)	Playback output level adjustment selection	Q9 and Q10 are on, and Q11 and Q12, off during deck A playback. Q9 and Q10 are off, and Q11 and Q12, on during deck B playback
Q13, 14	DTC124ES	Deck A/B selection	Q13 is off, and Q14, on during deck A playback. Q13 is on, and Q14, off during deck B playback.
Q15, 16	2SC1740S(Q, R) 2SC945(R) (Q, P)	MPX selection	On during normal recording and off during tuner recording.
Q17, 18	2SC1740S(Q, R) 2SC945(R) (Q, P)	Recording level adjustment selection	On during recording and off in modes other than recording.
Q19, 20	2SC1302S(S, T) 2SD2878(B)	Line output muting	On during stop and off in modes other than stop. (On when auto bias CCRS is set.)
Q30	2SC1740S(Q, R) 2SC945(R) (Q, P)	Relay driver	On during playback and off during recording.
Q31	DTC124ES	70 µs 120 µs selection	On for 70 µs and off for 120 µs.
Q32	2SA733(A) (Q, P) 2SA933S(Q, P)	Recording mute driver	Off during recording (dubbing and REC pause) and on in modes other than recording.
Q33	DTC124ES	Deck A playback equalizer selection	On for 70 µs and off for 120 µs.
Q34	DTC124ES	Deck B playback equalizer selection	On for 70 µs and off for 120 µs.
Q35	DTC124ES	Inverter level shifter	On at twice normal speed and off at normal speed.
Q36	DTC124ES	Inverter level shifter	Off at twice normal speed and on at normal speed.
Q37, 42	DTC124ES	HX slow start switch	Raises the bias oscillation waveform gradually during recording.
Q38, 39	2SC945(A) (Q, P)	Erase head excitation	A 105-kHz push-pull oscillation occurs during recording to provide erase and bias currents.
Q40	2SD853(E, F)	Bias oscillator circuit	Darlington connection
Q41	2SC1740S(Q, R) 2SC945(R) (Q, P)		
Q43	2SA733(A) (Q, P) 2SA933S(Q, R)	Constant current waveform	Constant current circuit
Q44	DTC124ES	X FADE selector switch	On during X FADE and off in states other than X FADE.
Q45	2SC1740S(Q, R) 2SC945(R) (Q, P)	Auto-bias signal input switch	Off during auto-bias setting and on in states other than auto-bias setting.
Q46, 47	DTC124ES	DOLBY OFF/B/C selection	Q46 is on when Dolby is off, and Q47, on when Dolby B is selected.
Q48, 49, 50	DTC124ES	PB/REC/2 × speed MPX panel selection mode	Q48 is on for normal speed, Q49, on for playback, and Q50, on for 2 × speed.
Q51	DTC124ES	Q15/Q16 driving level shifter	
Q52	DTC124ES	MPX selection inverter	
Q53	2SA733(A) (Q, P) 2SA933S(Q, R)	Line output mute driver	On during stop and off in modes other than stop. (On when auto-bias CCRS is set.)
Q56	DTC124ES		Off during the auto-bias test tone oscillation and on during other oscillation.

CIRCUIT DESCRIPTION

Ref No.	Name	Function	Description
Q100	2SD1266(Q, P)	15 V AVR emitter follower	
Q101	2SD941(Q, P)	12 V constant voltage	Darlington connection
Q102	2SA733(A) (Q, P) 2SA933S(Q, P)		
Q103	2SC1740S(Q, R) 2SC945(A) (Q, P)	Microcomputer reset	On for a fixed time immediately after the power is turned on or off.
Q104~107		Key scan current buffer	
Q108~110	2SC1740S(Q, R) 2SC945(A) (Q, P)		
Q111	2SA733(A) (Q,P) 2SA933S(Q, R)	Level amp output slice	On during slicing. The level amp output is sliced so that it does not exceed the microcomputer power supply voltage of 5 V. The amp output is slightly compressed when an overvoltage is input.
Q112	2SC1740S(Q, R) 2SC945(A) (Q, P)	Level amp VU gain selection	Q112 is on during VU (normal CRLS recording).
Q113	2SC1740S(Q, R) 2SC945(A) (Q, P)	Level amp auto-bias gain selection	Controlled by Q56. Usually set off and on only during auto-bias. Q113 then operates as an auto-bias amplifier.
Q114	2SC1740S(Q, R) 2SC945(A) (Q, P)	DPSS sensitivity selection	
Q115	2SC1740S(Q, R) 2SC945(A) (Q, P)	Auto-bias test tone filter selection	Controlled with pin 13 or IC1. On when the test tone is 400 Hz during auto-bias and off when it is 10 kHz.
IC1	µPD75112CW-071	Microcomputer	See attached sheet
IC2	NJM45580	+12 V AVR and +15 V AVR	
IC3	µPC7805HF	+5 V AVR	
IC4	M5195ASL PST5290	Microcomputer reset	Low reset
IC5	NJM45580	DPSS amp/level amp	Amplifier and semilogarithmic amplifier.
IC6	CXA11158P	Playback equalizer amp	
IC7	HA12142NT	DOLBY B/C NR IC	
IC8	CXA1198AP	Recording equalizer amp	
IC9	TC40518P µPD4051BC	Recording equalizer time constant selection	
IC10	µPC1297CA	HX PRO IC	
IC11	TD62554S	Bias step	Controlled with pins 9 through 12 of IC1. Pin 1, 2, 3, or 4 becomes 5 V during auto-bias. Pins 1 through 4 all become 0 V when a metal tape is used.
IC12	TD62554S	Normal chrome bias setting	
IC13	TC9213P	Electronic level control IC	Controlled by microcomputer.
IC15, 16	NJM4565D-D	Buffer IC13	Voltage follower

CIRCUIT DESCRIPTION

MICROPROCESSOR OPERATION SPECIFICATION

1. FUNCTION OUTLINE

1-1 Used microprocessor

① **μPD75112CW-071/079**

A control master microprocessor, which controls over the cassette mechanism, the recording/playback circuit, the electronic VR unit (TC9213P).

1-2 Functions

① Either deck A or deck B performs each operation of forward play (FWD PLAY), reverse play (RVS PLAY), fast forwarding (FF), rewinding (REW), recording (REC), recording pause (REC PAUSE), play pause (PLAY PAUSE), and stop (STOP) by their corresponding seven keys.

② **Relay Play**

Provided that cassettes are present in both A and B and the direction mode is ⇄ or ⊃, when the end of the tape is reached in the playback of a deck, the playback of the other deck starts automatically.

③ **Dubbing**

The normal dubbing or high-speed dubbing from deck A to deck B is feasible by use of the DUBBING key or HI-DUBBING key.

④ **DPSS mode**

Each operation of skip music scan, one-tune repeat, dash & play, full repeat, rewind play, re-recording standby, and auto recording mute is performed by the double pressure of its corresponding key or by a key operation during the operation mode.

⑤ **Auto bias**

The 400 Hz and 10 kHz recording/play levels are detected to set the optimum bias of that tape. (NOR. CrO_2 TAPE)

⑥ **CCRS**

By combined use with DP-711, recording is automatically feasible at an optimum level and an optimum bias from a CD player.

⑦ **Serial communications**

By combined use with a system provided with a serial communication bus, synchronous recording is feasible with a CD player or turntable through full remote control and two-way image operation.

⑧ **Backup**

Recording VR levels are backed up by running directions of deck and recording sources.

a) As to the running direction of a deck, that in final play or recording is backed up.

b) The REC VR level is backed up for every source. When the REC VR level is changed with the CRLS key, the source REC VR data selected at the time is rewritten. The initial state of the recording source is set to TUNER to select the source entered in the amplifier selector memory of the deck. Subsequent recording sources are selected with the amplifier selector. If the amplifier selector is set to the TAPE position, the REC VR level data cannot be rewritten and backed up.

⑨ **MPX auto ON/OFF**

The MPX ON ON/OFF pin (pin 23) is set to on in the REC mode when the deck amplifier selector memory is set to TUNER. It is set to off in the normal operating and REC modes when the selector memory is set to positions other than TUNER.

⑩ **X FADE**

The timing chart of the BIAS (pin 51) and X FADE (pin 60) pins and REC VR level durings the X FADE operation is shown in the figure below.

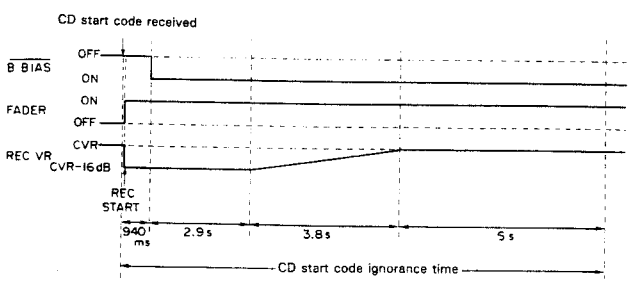

X-711

CIRCUIT DESCRIPTION

3. OTHER FUNCTIONS

3-1 Synchronous recording (CD player and cassette deck, or turntable and cassette deck)

The deck can know the current recording source by analyzing the selector code from the amplifier at any time. In addition, after the recording mode is entered, the recording source does not change because of the preceding item (2).

By virtue of these two principles, the deck can obtain synchronization by analyzing the code from the device from which recording is made at present.

(a) Synchronous operation between CD player and cassette deck

Deck status \ CD operation	Stop→play	Pause→play	Play→pause	Play→stop	Pause→stop	Play→tray open	Pause→tray open
Recording (in tape run)	Non change	Non change	ARM is entered. 4 seconds later, the recording pause mode is entered.	ARM is entered. 4 seconds later the tape stops.	←	←	←
ARM (auto recording mute)	ARM is stopped, and recording is made.	←	After the termination of the current ARM time, the recording pause mode is entered.	After the termination of the current ARM time, the stop mode is entered.	←	←	←
Recording pause	The recording mode is entered.	←	Non change	The stop mode is entered.	←	←	←

3-2. CRLS operation (Deck B only)

1 The deck automatically enters the REC PAUSE mode when the CRLS key is pressed in the STOP mode. The internal electronic level control is then set to maximum to detect the input level. If no signal is input (less than −35 dB), the operation is interrupted. If a signal is input, the input level is detected for 20 seconds. The electronic level control is then set to the minimum so that the peak value becomes a DOLBY level (+3 dB), and the CRLS indicator blinks. The deck also operates in the same way as above when it has already entered the REC PAUSE mode. (The deck does not operate when CCRS has already been set for CD.)

2 Fixing and memorizing the level control setting

a. The level control setting is automatically determined in 20 seconds and memorized in the memory for the appropriate amplifier selector input. The same operation as above is performed with the deck in the REC PAUSE mode when the CRLS key is pressed again while an indicator is blinking.

b. The level control setting is fixed when the REC key is pressed while an indicator is blinking, and it is memorized in the memory for the appropriate amplifier selector input. Deck B then enters the REC mode.

c. The operation is interrupted when the STOP key is pressed while and indicator is blinking. The level control is returned to the position memorized in the memory for the appropriate amplifier selector input.

3 The memorized level control position is set to CD, TUNER, or DAT/LD with the amplifier selector. The memorized level is held for at the least one week, after which the level control position is returned to the initial setting (−15 dB [max]). When the CRLS key is continuously pressed for more than three seconds, the indicator blinks slowly, then goes off. The memorized value for the appropriate amplifier selector input is returned to the initial setting (−15 dB). Other memorized values are unaffected.

CIRCUIT DESCRIPTION

2. KEY DESCRIPTION

Key Name.	Function	Display
FWD PLAY ▶ (Common for A and B)	Provided that a cassette is present, this key activates playback in FWD direction. Pressing the key during FWD playback activates 1-program repeat. This key is inhibited while the other deck is in the REC or REC PAUSE mode.	The LED light up.
RVS PLAY ◀ (Common for A and B)	Provided that a cassette is present, this key activates playback in RVS direction. Pressing the key during RVS playback activates 1-program repeat. This key is inhibited while the other deck is in the REC or REC PAUSE mode.	The LED light up
FF ▶▶ (Common for A and B)	Winds tape to the right reel. Pressing the key during playback activates skip search. Pressing the key during RVS recording activates Re-Rec Standby.	
REW ◀◀ (Common for A and B)	Winds tape high speed to the left reel. Pressing the key during playback activates skip search. Pressing the key during FWD recording activates Re-Rec Standby.	
STOP ■ (Common for A and B)	Interrupts any operation and stops tape.	
REC/ARM ●/ (B only)	Starts recording in the current head direction. Pressing the key during recording activates ARM.	The REC indicator lights up. It blinks during ARM, and lights steadily after its end.
PAUSE (Common for A and B)	Changes the mode from REC to REC PAUSE, or from PLAY to PLAY PAUSE.	The PAUSE indicator lights.
CRLS (B)	Automatically adjusts the recording level for each source. * This CRLS key can be used during A STOP, B STOP, or REC PAUSE, other than selector TAPE. Sampling is completed in about 20 seconds. The recording level is fixed when the REC or CRLS key is pressed during sampling. If no key data is entered, the level is canceled in about one second. The recording level is returned to the initial value (−15 dB) when the CRLS key is pressed continuously for three seconds.	The CRLS LED blinks rapidly during the recording level setting and lights continuously after level setting. The LED goes off when the selector is changed. The CRLS LED blinks slowly during the initial setting and goes off after setting.
X FADE (B only)	Overlaps the inter-tune for recording during CCRS.	The X FADE LED lights.
AUTO BIAS (B only)	Automatically adjusts the bias if the tape can be recorded on.	The REC LED lights, then goes off. The AUTO BIAS LED blinks, then lights continuously after setting.
CCRS (B only)	In interlocked operation with the CD player, adjusts the CD recording level automatically.	The CCRS indicator blinks at high speed. It blinks at low speed during edit recording after completion of setting.
NOR SPEED DUBBING	Starts normal speed dubbing from A→B. Pressing the key during normal dubbing activates ARM on Deck B, and pressing the key again resumes normal dubbing.	The DUB, NOR, and REC LEDs light and blink during the ARM operation.
HIGH SPEED DUBBING	Syarts high-speed dubbing from A→B. Pressing the key during high-speed dubbing activates ARM on Deck B.	The DUB, HIGH, and REC LEDs light and blink during the ARM operation.
DOLBY SW	Sets the Dolby NR mode. B.....Dolby ON, B type. OFF....Dolby OFF. C.....Dolby ON, C type.	
CASSETTE DETECT SW	Turns ON when a cassette shell is present. While this switch is OFF, the keys of the deck and the DUBBING key are inhibited. In case of Deck B, The AUTO BIAS and CCRS keys are also inhibited.	
FWD REC PERMIT SW	Turns ON when recording permission tab for FWD direction is present. Recording in the FWD direction is inhibited while this SW is OFF.	
RVS REC PERMIT SW	Turns ON when recording permission tab for RVS direction is present. Recording in the RVS direction is inhibited while this SW is OFF.	

CIRCUIT DESCRIPTION

Function	Key names	Description
REWIND PLAY	◀◀+▶ or ▶▶+◀	Tape rewinds until the end, the first program is searched, and playback is started as soon as it is detected.
DASH & PLAY	◀◀+▶▶	When a portion without recorded program has lasted for more than 10 seconds during playback, cueing is started, and playback resumes from the position where the beginning of the next program is detected. The full-repeat function can be used according to the Reverse Mode SW setting. ⇄ .....One-side full repeat × 8 times ⇄ .....Two-side full repeat × 8 times (16 sides) ⇄ .....Two-side relay repeat ×29 to 31 sides in total on A and B. If cassette is not present in one deck, playback ends at the RVS end (i.e. after 1 or 2 times).

*** CRLS key**

The computer-controlled recording level system (CRLS) samples the music source level for about 20 seconds and automatically determines the correct recording level.

- **If you forget to press the CRLS key**

Recording is possible with a reference recording level. The reference recording level, common to each input selector key, is set at the factory.

- **The level that has been set is memorized**

The level that is set using the CRLS key is memorized for every input selector key (CD, TUNER, and DAT/LD). Recording is possible at the same level without pressing the CRLS key after that.

- **If you wish to return to the former level after pressing the CRLS key**

Press the stop key while the CRLS indicator is blinking. The level is then returned to its former setting.

- **If you press the CRLS key continuously for more than three seconds**

The CRLS indicator blinks rapidly, then goes off. The level memorized for the input selector whose indicator lights at the time is returned to the reference level.

2-2 KEY MATRIX

	KS1	KS2	KS3	KA4
KR1	—	VOL MAX	PACK A	PACK B
KR2	TEST2	TEST1	PLAY A	PLAY B
KR3	B ▶	B ●	CCRS	INHFB
KR4	B ■	DOLBY C		INHRB
KR5	B ◀	DOLBY B		A ◀◀
KR6	A ▶▶	B	X FADE	A ▶
KR7	B ▶▶	CRLS	H-DUBB	A ■
KR8	B ◀◀	AUTO BIAS	N-DUBB	A ◀

2-3 LED MATRIX

	KS1	KS2	KS3	KA4
LED1	B FWD	B PAUSE	CCRS	A RVS
LED2	B RVS	CRLS	X FADE	A FWD
LED3	B REC	AUTO BIAS	H-DUBB	N-DUBB
LED4	—	—	—	—

CIRCUIT DESCRIPTION

3. OTHER FUNCTIONS

3-1 Synchronous recording (CD player and cassette deck, or turntable and cassette deck)

The deck can know the current recording source by analyzing the selector code from the amplifier at any time. In addition, after the recording mode is entered, the recording source does not change because of the preceding item (2).

By virtue of these two principles, the deck can obtain synchronization by analyzing the code from the device from which recording is made at present.

(a) Synchronous operation between CD player and cassette deck

Deck status \ CD operation	Stop→play	Pause→play	Play→pause	Play→stop	Pause→stop	Play→tray open	Pause→tray open
Recording (in tape run)	Non change	Non change	ARM is entered. 4 seconds later, the recording pause mode is entered.	ARM is entered. 4 seconds later the tape stops.	←	←	←
ARM (auto recording mute)	ARM is stopped, and recording is made.	←	After the termination of the current ARM time, the recording pause mode is entered.	After the termination of the current ARM time, the stop mode is entered.	←	←	←
Recording pause	The recording mode is entered.	←	Non change	The stop mode is entered.	←	←	←

3-2. CRLS operation (Deck B only)

1 The deck automatically enters the REC PAUSE mode when the CRLS key is pressed in the STOP mode. The internal electronic level control is then set to maximum to detect the input level. If no signal is input (less than −35 dB), the operation is interrupted. If a signal is input, the input level is detected for 20 seconds. The electronic level control is then set to the minimum so that the peak value becomes a DOLBY level (+3 dB), and the CRLS indicator blinks. The deck also operates in the same way as above when it has already entered the REC PAUSE mode. (The deck does not operate when CCRS has already been set for CD.)

2 Fixing and memorizing the level control setting

a. The level control setting is automatically determined in 20 seconds and memorized in the memory for the appropriate amplifier selector input. The same operation as above is performed with the deck in the REC PAUSE mode when the CRLS key is pressed again while an indicator is blinking.

b. The level control setting is fixed when the REC key is pressed while an indicator is blinking, and it is memorized in the memory for the appropriate amplifier selector input. Deck B then enters the REC mode.

c. The operation is interrupted when the STOP key is pressed while and indicator is blinking. The level control is returned to the position memorized in the memory for the appropriate amplifier selector input.

3 The memorized level control position is set to CD, TUNER, or DAT/LD with the amplifier selector. The memorized level is held for at the least one week, after which the level control position is returned to the initial setting (−15 dB [max]). When the CRLS key is continuously pressed for more than three seconds, the indicator blinks slowly, then goes off. The memorized value for the appropriate amplifier selector input is returned to the initial setting (−15 dB). Other memorized values are unaffected.

CIRCUIT DESCRIPTION

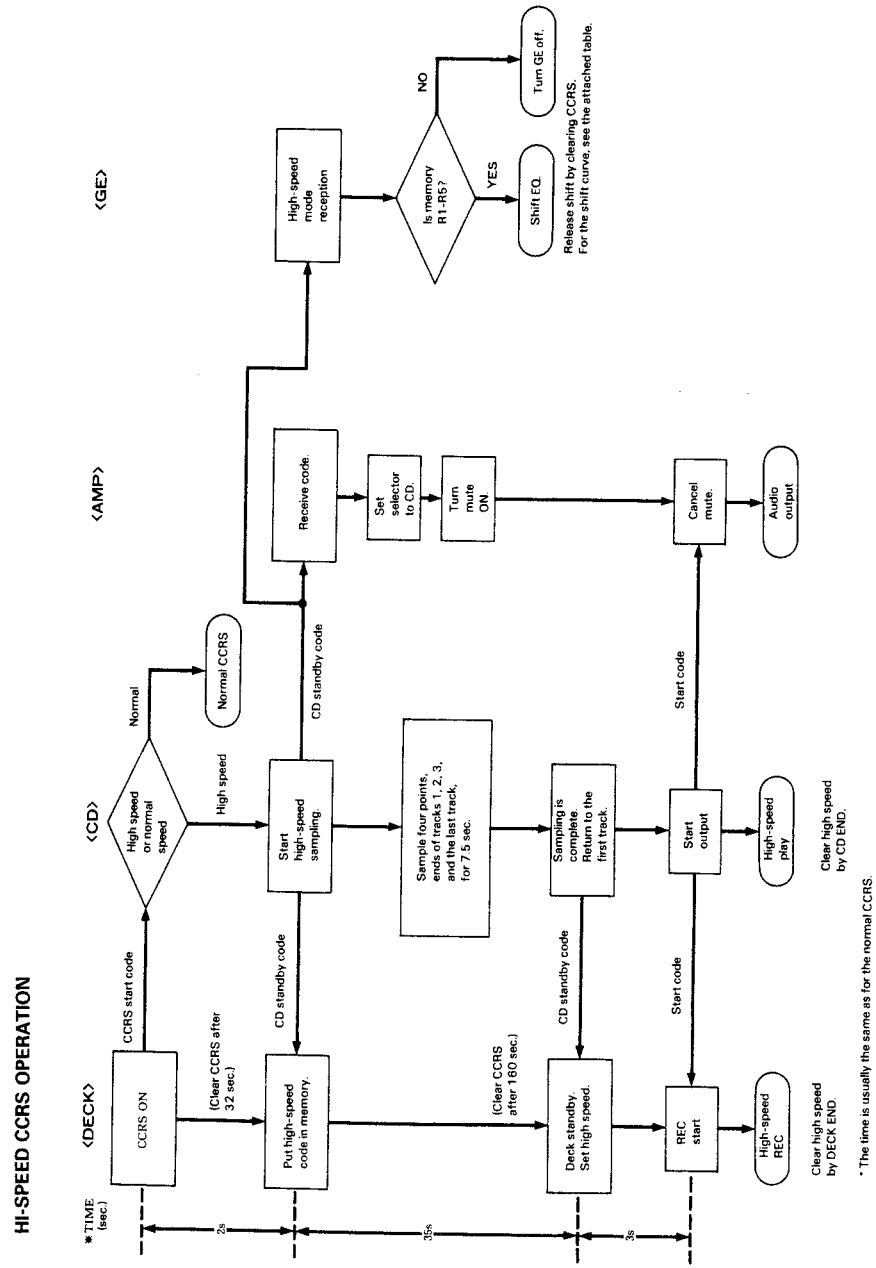

CIRCUIT DESCRIPTION

4. TEST MODE

4-1 Test 1

a) Setting

Strap the test pins and diode ([5]—◀—[4]) and turn on the power. The TEST mode is then entered.

b) Cancellation

Press the PAUSE key or turn off the power. The TEST mode is then canceled The electronic level control is not initialized when the TEST mode is canceled with the PAUSE key. So be sure to cancel the TEST mode by turning off the power when finished.

c) Operation

TEST mode NO.		Operation
①	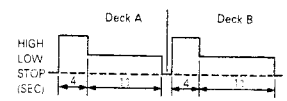	Deck A enters the PLAY mode at high speed about two seconds after the power is turned on in the DIRECTION ⊃ mode, enters the PLAY mode at normal speed for about 11 seconds without lowering the head after four seconds, then enters the STOP mode. Deck B then operates in the same way. If deck A has no cassette, deck B operates first. If neither deck A nor deck B has a cassette, no operation is performed.
②	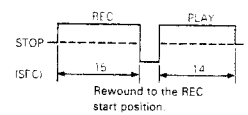	Deck B enters the REC mode about two seconds after the power is turned on in the DIRECTION ⊂⊃ mode and enters the PLAY mode by rewinding the tape to the REC start position after 15 seconds. Deck B then enters the STOP mode after 14 seconds. Only deck B operates.
③	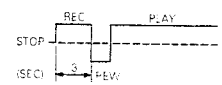	The deck enters the REC mode for three seconds when the REC key is pressed. The deck then enters the PLAY mode by rewinding the tape to the REC start position.
④	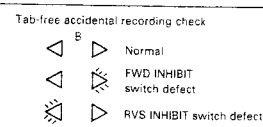	If the DIRECTION LED on deck B goes off, the REC INHIBIT switch is normal. If the FWD LED lights, the FWD INHIBIT switch is defective. If the RVS LED lights, the RVS INHIBIT switch is defective. A cassette without a tab is not required.
⑤	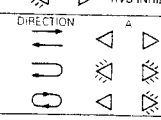	The A RVS LED lights when the DIRECTION switch is set to the ONE WAY mode after the power is turned on. The A FWD-RVS LED lights when the DIRECTION switch is set to the REVERSE mode, and the A FWD LED lights when it is set to the ENDLESS mode.
⑥	UP/DOWN electronic level control	The level control goes up when the HI-DUBB key is pressed and down when the NOR-DUBB key is pressed. The level is switched to 0 dB, −12 dB, and −79 dB. The initial level in the TEST 1 mode is −12 dB
⑦	Speed adjustment	The deck enters the PLAY mode at normal speed when the FWD PLAY key is pressed and enters the PLAY mode at high speed when the FF key is pressed. The head is not lowered when the FWD PLAY and FF key are pressed alternately.

CIRCUIT DESCRIPTION

4-2. Test 2

a) Setting

Strap the test point with a diode (KS1—KR2) and turn on the power.

b) Canceling

Press the PAUSE key or turn off the power.

c) Operation

- F. PLAY
  R. PLAY
  Enters the PLAY mode in the direction selected by the FWD or RVS PLAY key. Can be used at all times. The other deck stops. Can also operate in REC mode.
- REC
  Enters the REC mode. Can be used at all times. The other deck stops in modes other than REC. Decks A and B can accept in the same timing.
- Dubbing
  Enters the DUB mode. Can be used at all times. Operates in high-speed or normal mode.
- CCRS
  Can be used at all times. Only the level control enters the REC mode during recording. A signal is also output fromt the head. Canceled with the STOP key.
- Auto-bias
  Can be used at all times. The bias is changed in four steps every 0.2 seconds when the auto-bias switch is pressed in REC mode. Step increments each time when the switch is pressed.
- The electronic level control is at maximum from when the power is turned on until it is turned off. All LEDs light.
- The direction keys are used as to set the timer.

  Timer PLAY Timer REC

  The timer PLAY and REC keys operate two seconds after the power is turned on.

4-3 INITIAL CONDITION

Item	Condition	Item	Condition
400/10K	400	DOLBY R/P	PLAY
NORMAL/OSC	NORMAL	DOLBY/ON/OFF	OFF
OSC OUT	OFF	R/P	PLAY
MPX	OFF	A/B	B
X FADE	OFF	EQ SPEED	NORMAL
SOL1	OFF	REC MUTE	ON
SOL2	OFF	LINE MUTE	ON
CPM	ON 1SEC OFF	BIAS	OFF
CSP	NORMAL	VU/CCRS	VU
ELE. VOL	−15 dB		

CIRCUIT DESCRIPTION

5. μ-COM PIN DESCRIPTION

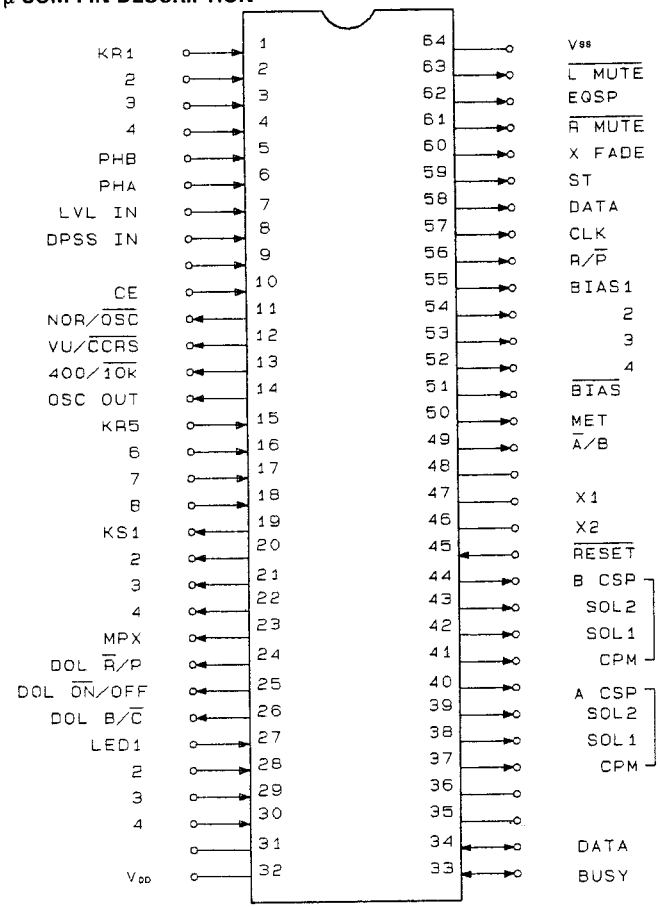

CIRCUIT DESCRIPTION

Pin Description

Pin No.	Pin name	I/O	Symbol	Function	
1	P13/INT3	I	KR1	Key return signal input	H: ON L: OFF
2	P12/INT2	I	KR2	Key return signal input	H: ON L: OFF
3	P11/INT1	I	KR3	Key return signal input	H: ON L: OFF
4	P10/INT0	I	KR4	Key return signal input	H: ON L: OFF
5	PTH03	I	PHB	Deck B rotation detection sensor input	
6	PTH02	I	PHA	Deck A rotation detection sensor input	
7	PTH01	I	LEVEL IN	CCRS, CRLS, and auto-bias signal input	
8	PTH00	I	DPSS IN	Inter-tone signal input	H: Tone L: No tone
9	TI0	I	—	Unused (Connected to ground.)	
10	TI1	I	C, E	AC on/off detection	H: AC ON L: AC OFF
11	P23	O	NOR/OSC	Auto-bias input signal selection	
12	P22/PCL	O	VU/CCRS	Level amp sensitivity selection	H: NORMAL L: CCRS
13	P21/PTO1	O	400/10K	400-Hz/10-kHz filter selection	H: 400 Hz L: 10 kHz
14	P20/PTO0	O	OSC OUT	400-Hz or 10-kHz square wave output during auto-bias	
15	P03/SI	I	KR5	Key return signal input	H: ON L: OFF
16	P02/SO	I	KR6	Key return signal input	H: ON L: OFF
17	P01/SCK	I	KR7	Key return signal input	H: ON L: OFF
18	P00/INT4	I	KR8	Key return signal input	H: ON L: OFF
19	P123	O	KS1	Key scan signal output	H: OFF L: SCAN
20	P122	O	KS2	Key scan signal output	H: OFF L: SCAN
21	P121	O	KS3	Key scan signal output	H: OFF L: SCAN
22	P120	O	KS4	Key scan signal output	H: OFF L: SCAN
23	P133	O	MPX	MPX on/off selection	H: ON L: OFF
24	P132	O	DOLBY R/P	Dolby R/P selection	H: PLAY L: REC
25	P131	O	DOLBY ON/OFF	Dolby on/off control	H: OFF L: ON
26	P130	O	DOLBY B/C	Dolby B/C selection	H: B L: C
27	P143	I	LED1	LED drive output	H: Goes off L: Lights
28	P142	I	LED2	LED drive output	H: Goes off L: Lights
29	P141	I	LED3	LED drive output	H: Goes off L: Lights

X-711

CIRCUIT DESCRIPTION

Pin No.	Pin name	I/O	Symbol	Function	
30	P140	I	—	Unused	
31	NC	—	—	Open	
32	V_{DD}	—	—	Positive power supply	
33	P33	I/O	BUSY	Serial data input or output for system control	
34	P32	I/O	DATA	BUSY data input or output for system control	
35	P31	O	—	Unused (Open)	
36	P30	O	—	Unused (Open)	
37	P43	O	CPMA	Capstan A motor control	H: ON L: OFF
38	P42	O	SOL1A	A solenoid 1 control	H: ON L: OFF
39	P41	O	SOL2A	A solenoid 2 control	H: ON L: OFF
40	P40	O	CSPA	Capstan A motor selection	H: Normal L: 2× speed
41	P53	O	CPMB	Capstan B motor control	H: ON L: OFF
42	P52	O	SOL1B	B solenoid 1 control	H: ON L: OFF
43	P51	O	SOL2B	B solenoid 2 control	H: ON L: OFF
44	P50	O	CSPB	Capstan B motor selection	H: Normal L: 2× speed
45	RESET	I	—	Reset signal input	
46	X2	—	—	System clock oscillator connection	
47	X1	I	—	System clock oscillator connection	
48	P63	O	—	Unusd (Open)	
49	P62	O	A/B	Playback equalizer A/B selection	H: B L: A
50	P61	I	METAL	Metal hole signal input	H: L:
51	P60	O	BIAS	Bias B on/off selection	H: OFF L: ON
52	P73	O	BIAS4	Bias selection output	
53	P72	O	BIAS3	Bias selection output	
54	P71	O	BIAS2	Bias selection output	
55	P70	O	BIAS1	Bias selection output	
56	P83	O	R/P	REC/PLAY selection	H: REC L: PLAY
57	P82	O	CLK	Electronic level control serial clock output	
58	P81	O	DATA	Electronic level control serial data output	
59	P80	O	ST	Electronic level control strobe signal output	
60	P93	O	X FADE	Bias fade in control	
61	P92	O	RMUTE	B REC mute control	H: OFF L: ON
62	P91	O	EQSP	B REC equalizer speed selection	H: High L: Normal
63	P90	O	LMUTE	Line mute control	H: OFF L: ON
64	V_{SS}	—	—	GND	

CIRCUIT DESCRIPTION

6. TIMING CHART

STOP → FWD PLAY/ REC(---)

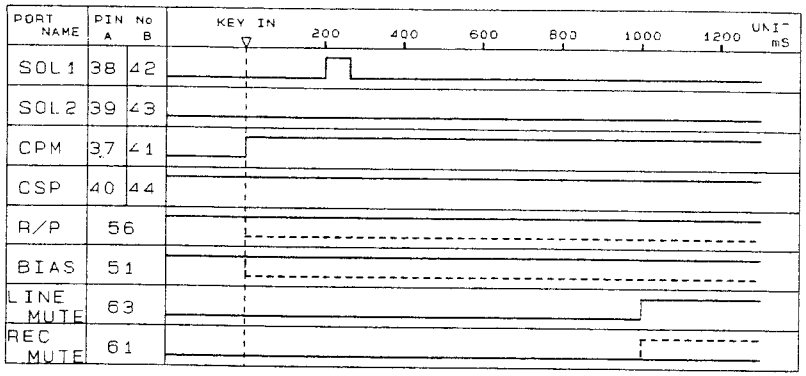

STOP → RVS PLAY/ REC(---)

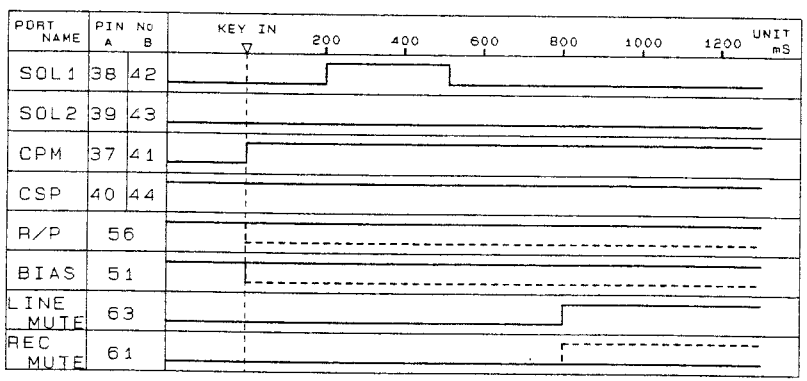

STOP → FF/RWD(---)

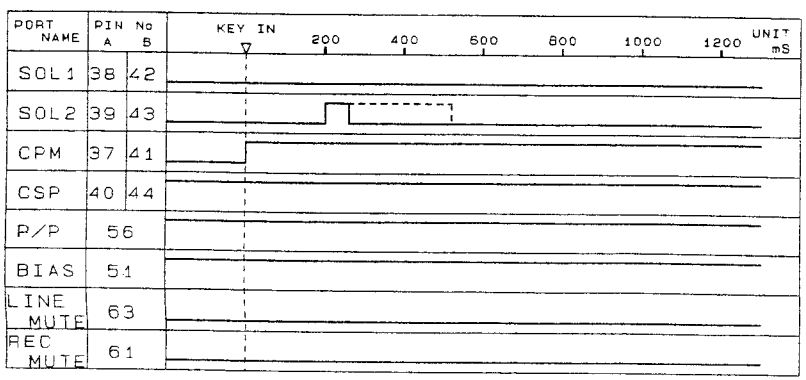

X-711

CIRCUIT DESCRIPTION

PLAY → STOP

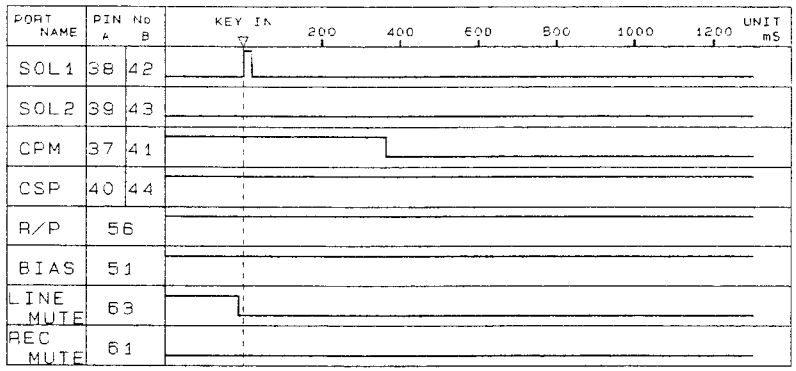

REC → STOP

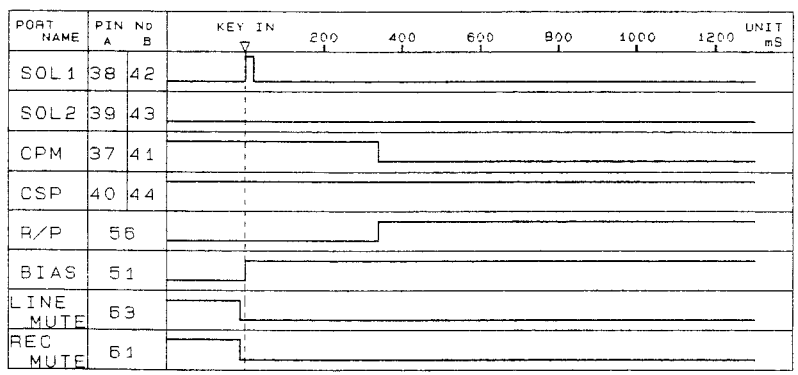

FF/RWD(---) → STOP

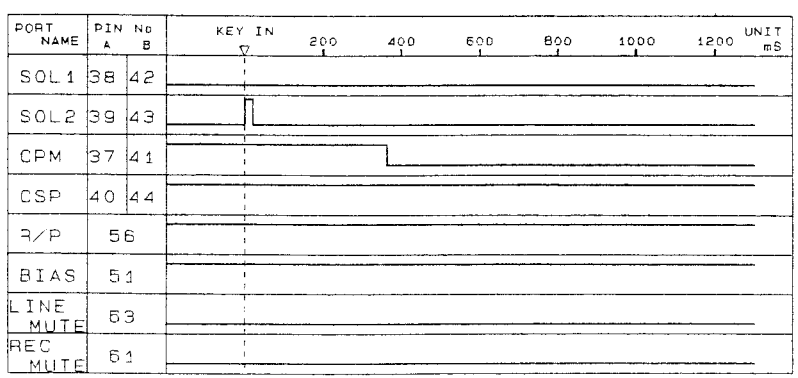

CIRCUIT DESCRIPTION

PLAY → CUE

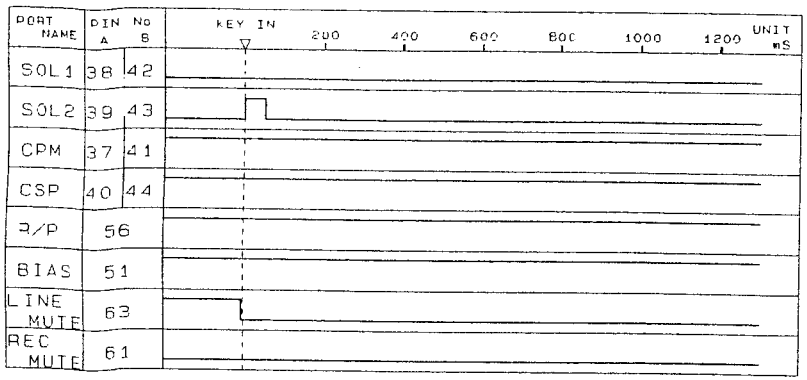

PLAY → REV

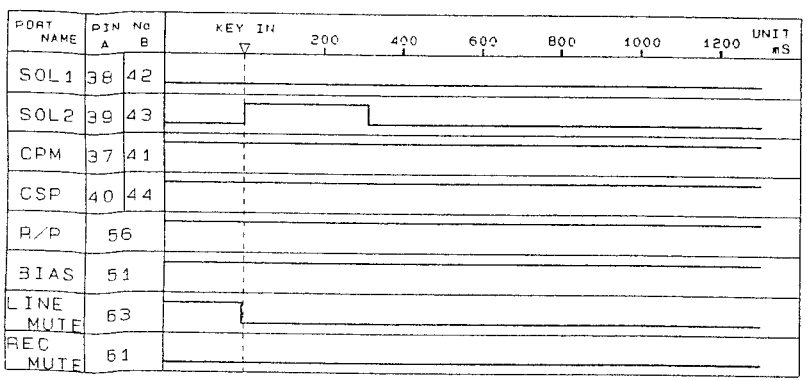

CUE/REV → STOP

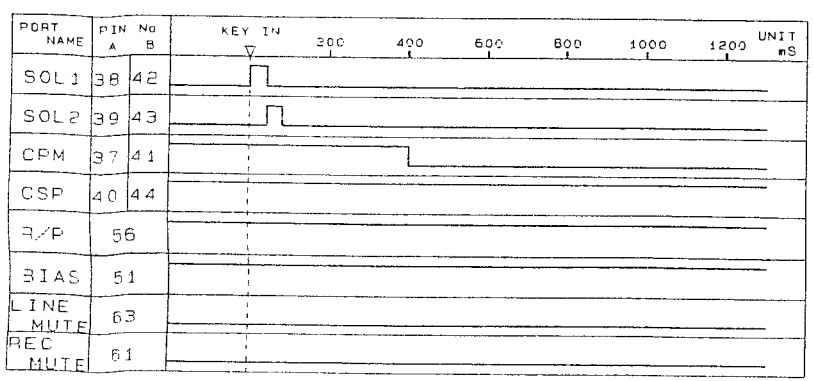

CIRCUIT DESCRIPTION

STOP → NOR DUBB → STOP

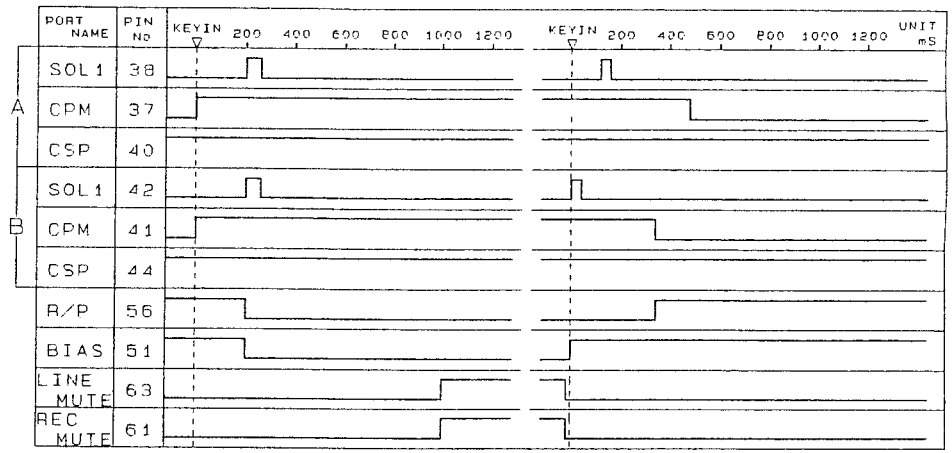

STOP → HI DUBB → STOP

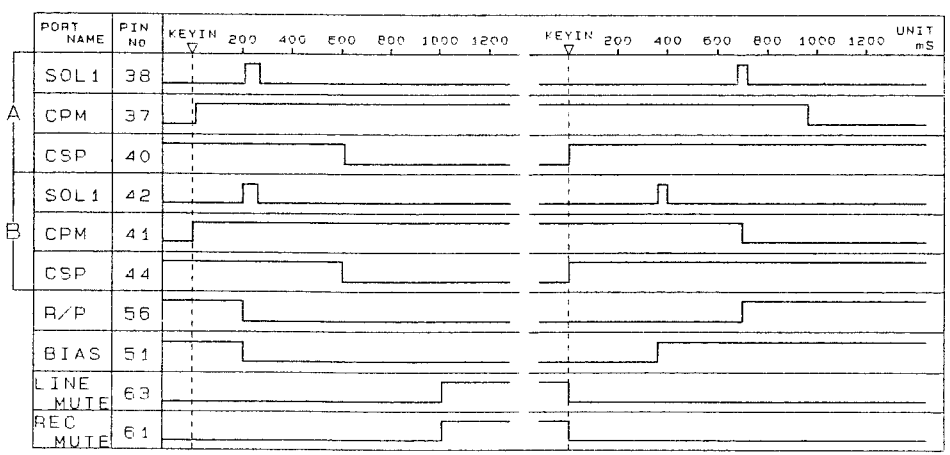

MECHANISM OPERATION DESCRIPTION

Figures inside ( ) in the diagram indicate the Ref. Nos. in the parts list. The illustrations are perspectives from the front unless otherwise specified.

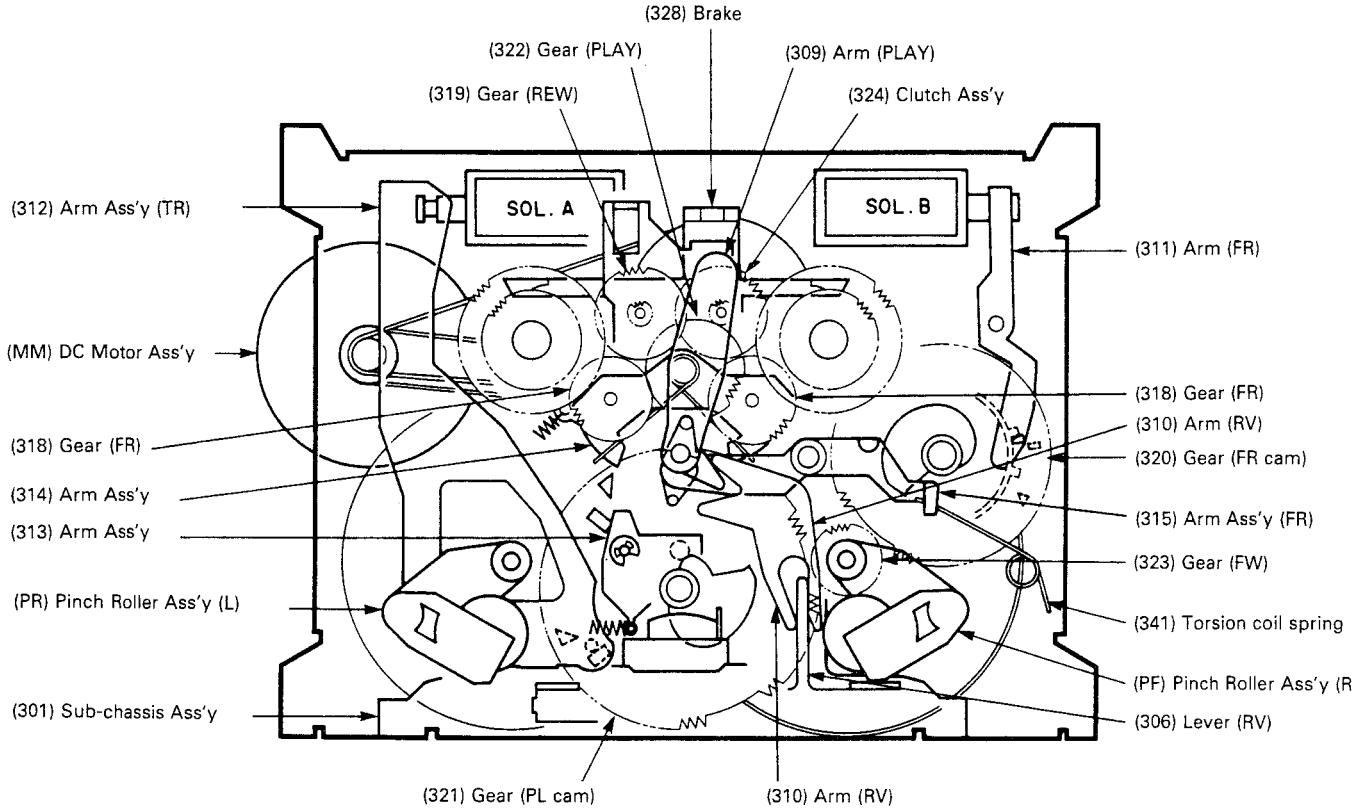

Parts Layout (Front perspective)

Driving power:	**130 g-cm or more**
Take up torque:	**35～75 g-cm**
FF/REW torque:	**70～160 g-cm**
Back tension torque:	**3～8 g-cm**

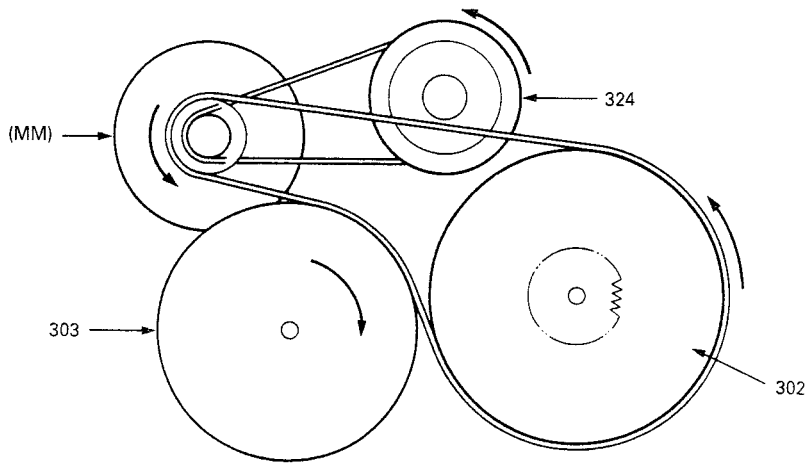

Fig. 1 Transmission of Rotation

MECHANISM OPERATION DESCRIPTION

1. STOP → PLAY/REC operation

1-1 By the signal from the microprocessor, the SOL. A is turned ON then immediately OFF.
This causes the shaft C caulked on the TR Arm Ass'y to be released from the stopper A on the play cam gear (321).
As the play cam gear (321) is pushed toward the direction of the arrow D by the boss 2 of the shift arm shaft (313), the play cam gear (321) is rotated slightly in the direction of the arrow 3 and meshed with the flywheel gear (323).

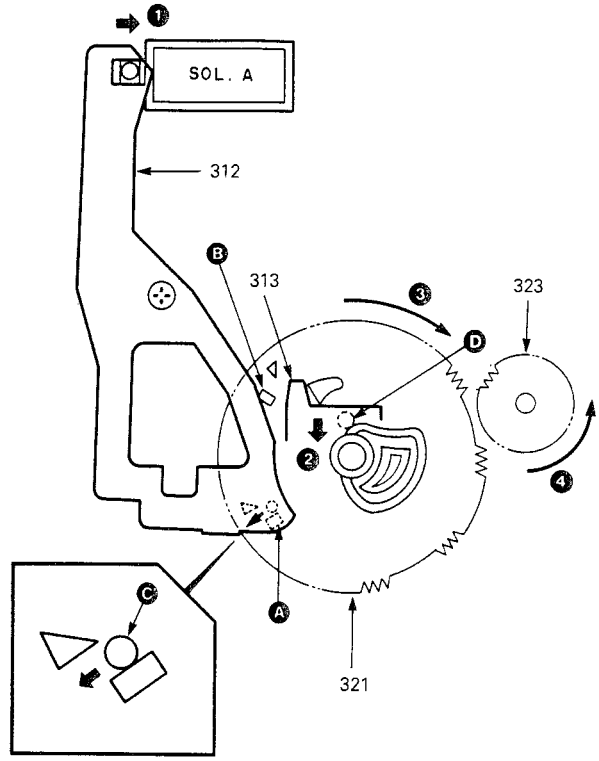

Fig. 2

1-2 When the flywheel gear (323) and play cam gear (321) are meshed, the shift arm shaft (313) is pulled up in the direction of the arrow 6 by the cam E on the play cam gear (321) until the caulked shaft C on the TR Arm Ass'y (312) comes in contact with the stopper B.
Similarly, the head chassis (301) connected to it is also moved upward.

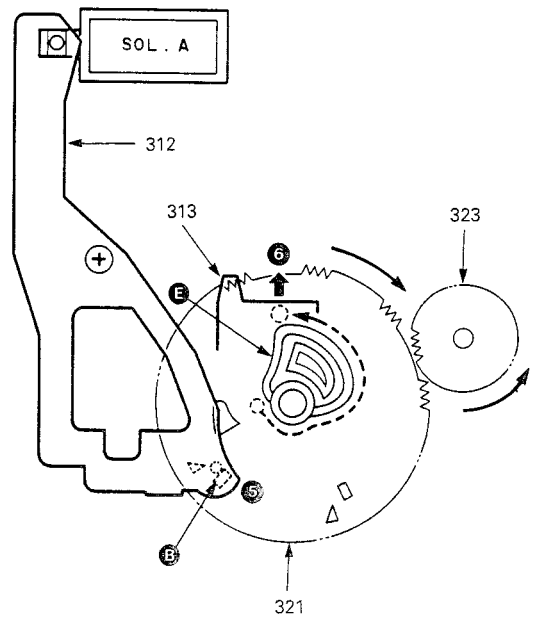

Fig. 3

MECHANISM OPERATION DESCRIPTION

1-3 When the head chassis (301) is moved up, the brake arm (328) is also pushed up in the direction of the arrow ❼ and released from the reel.
Then, the RV lever B (306) pushes the spring of the pinch roller (PF) upward until it is pressed against the capstan, and tape starts to run at this time. At the same time, the play gear (309) is tilted toward the direction of the arrow ❾ by the center notch of the head chassis (301), the play gear arm (322) is meshed with the Reel Ass'y (304), it is rotated in the direction shown in the illustration, and tape starts to be wound.

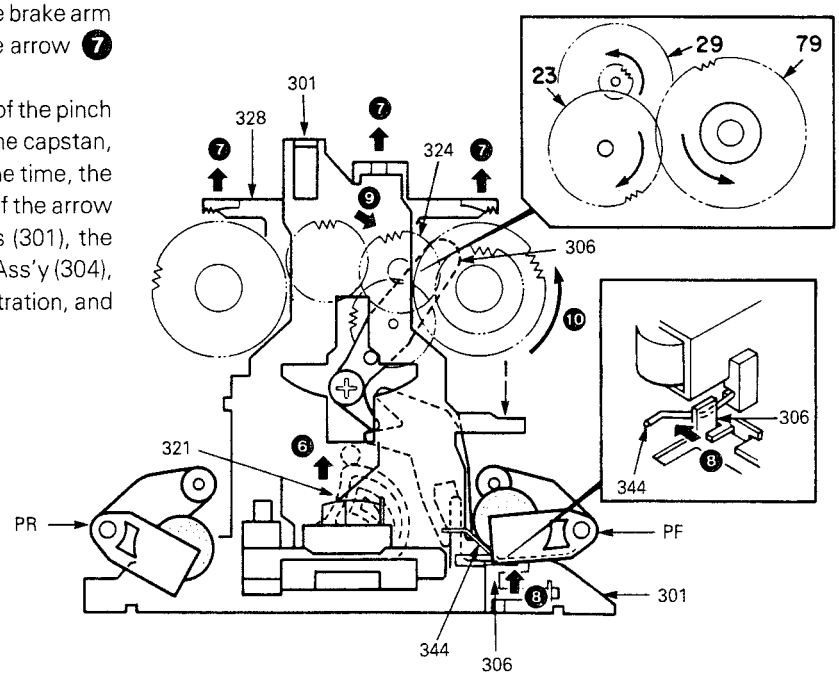

Fig. 4

2. PLAY/REC→STOP operation

When the SOL. A is turned ON again during play, the caulked shaft Ⓒ on the TR Arm Ass'y (312) is released from the stopper Ⓑ on the play cam gear (321), the play cam gear (321) starts rotation in the direction of the arrow, and it is stopped at the position of the stopper Ⓐ.
At any time, the head chassis is returned by the spring in the direction of the arrow ❹ until the stop position.

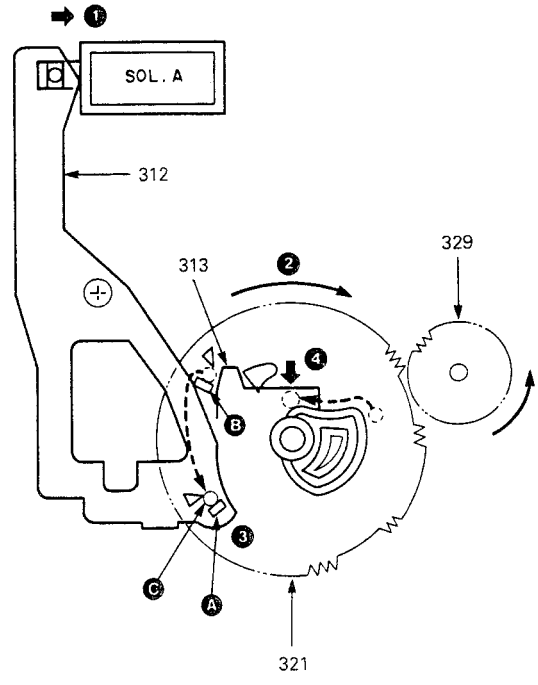

Fig. 5

MECHANISM OPERATION DESCRIPTION

3. FF/REW operations

By the signal from the microprocessor, the SOL. B is turned ON then immediately OFF. The trigger arm FR (311) is moved in the direction ❶, the projection Ⓕ is moved in the direction ❷ and released from the stopper Ⓗ.
As the FR cam gear (320) is pushed in the direction of the arrow ❸ by the FR shift arm (315) and spring (341), the gear is moved slightly and meshed with the flywheel gear (323). The FR cam gear is further rotated, and is stopped at the position where the boss Ⓕ of the trigger arm FR (311) comes in contact with the stopper Ⓖ.

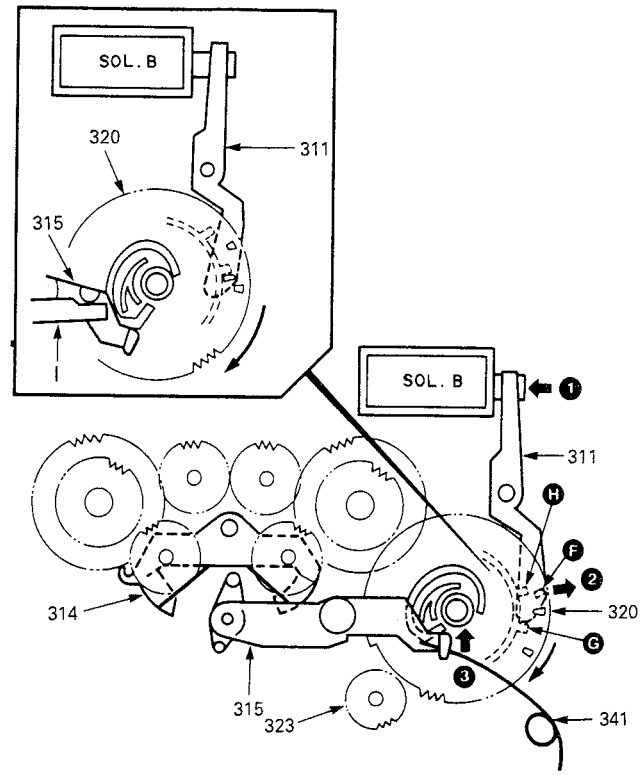

Fig. 6

4. FF operation

The FR shift arm (315) is moved in the direction of the arrow ❻ by the cam Ⓛ on the FR cam gear (320).
Then, the select arm (308) moves up along the shape of the mechanism base, and pushes up the FR arm spring (339). This causes the FR gear (318) on the FR arm (314) to be meshed with the clutch gear (324) and reel gear (304), which rotates in the direction of the arrow thereby putting the reel (304) into the FF operation.

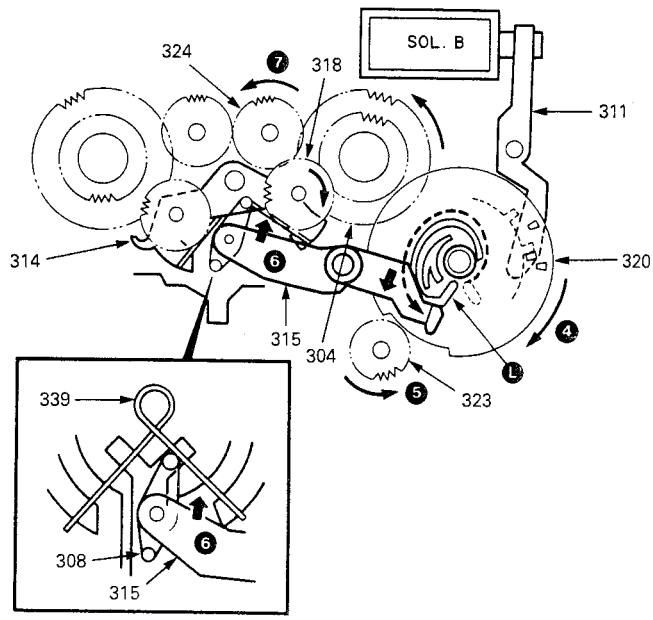

Fig. 7

MECHANISM OPERATION DESCRIPTION

5. REW operation

Similarly to the FF operation, the select arm (308) moves up in the direction of the arrow ❻ along the shape of the mechanism base, and pushes up the FR arm spring (339). This causes the FR gear (318) to be meshed with the REW gear (319) and reel gear (304), which rotates in the direction of the arrow thereby putting the reel (304) into the FF operation.

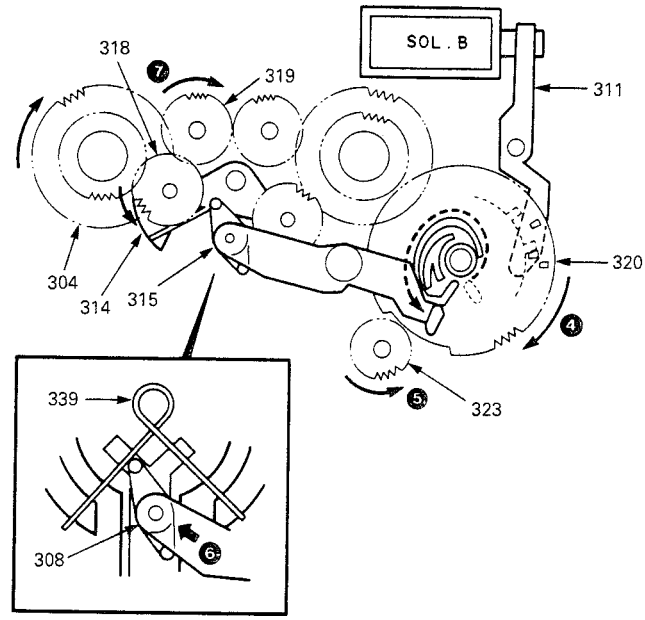

Fig. 8

6. Braking operation

When the select arm (308) moves upward, the "⌐" portion of the select arm comes in contact with the "⌒" portion of the brake arm (328), and disengages the brake arm by lifting it in the direction of the arrow ❾.

7. FF/REW switching

The FF and REW operations are switched by varying the tilting angle of the selector arm (308).

FF operation..... The SOL. B is turned OFF at the moment the trigger arm FR (311) is released from the stopper on the FR cam gear. As the FR lever (305) is still pulled by the spring (335), the select arm (308) moves upward in the direction of the arrow Ⓐ.

REW operation ..... Similarly, when the SOL. B is maintained ON for a while, the select arm (308) moves upward with the FR lever (305) in the position indicated by the dotted line, so it moves up in the direction of the arrow Ⓑ causing the REW operation.

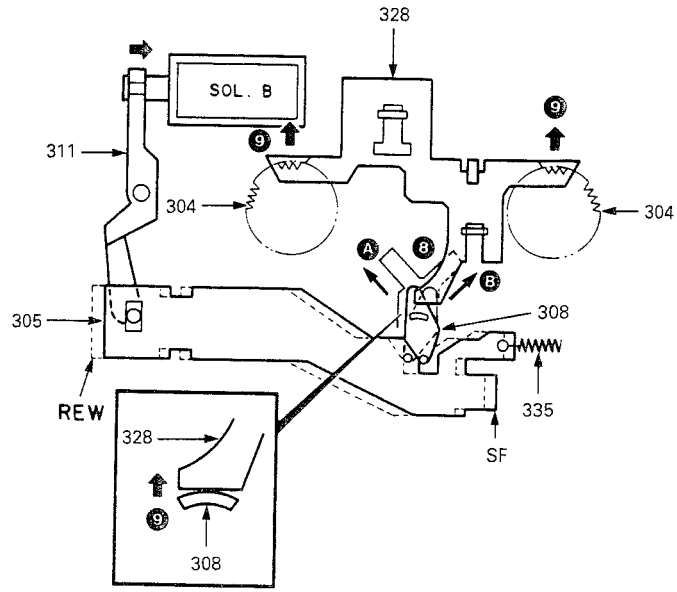

Fig. 9 (Rear perspective)

MECHANISM OPERATION DESCRIPTION

8. PLAY → CUE/REVIEW operation

8-1 When the SOL. B is turned ON during play, the FR cam gear (320) is meshed with the flywheel gear, and the FR shift arm (315) is pushed down in the direction of the arrow ❷ by the cam on the FR cam gear (320). At this time, the select arm (308) on the other end of the FR shift arm (315) is pushed up in the direction of the arrow ❹, so that the cue operation takes place in the condition of Fig. 10 and the review operation takes place in the condition of Fig. 11.

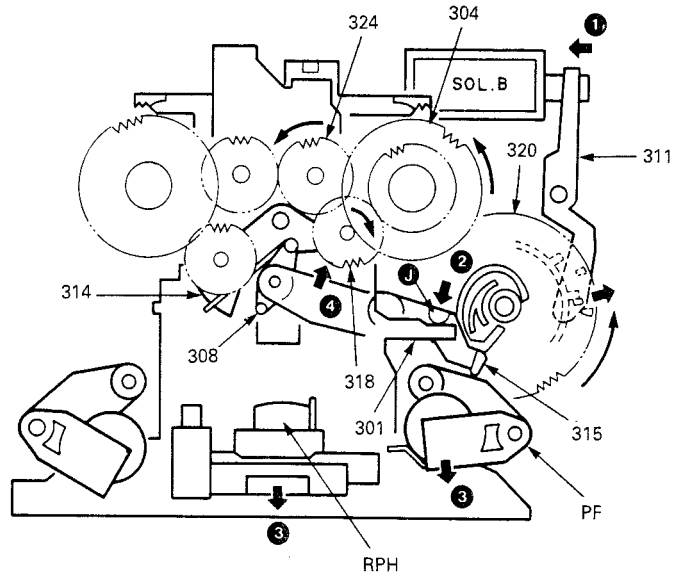

Fig. 10

8-2 The head chassis (301) is pushed down by the boss ❶ on the FR shift arm (315), and the Head Ass'y (RPH), tape and pinch roller (PF) are released from the pressure against the capstan shaft.
The play gear arm (309) is located on the other end of the select arm (308) of the FR shift arm. When the head chassis (301) moves downward, the boss ❶ of the play gear arm (309) is moved along the center notch of the head chassis, thereby disengaging the play gear (322) and reel (304).
In Cue/Review operation, the reel is operated by the FR gear (318) similarly to the case of FF/REW operation.

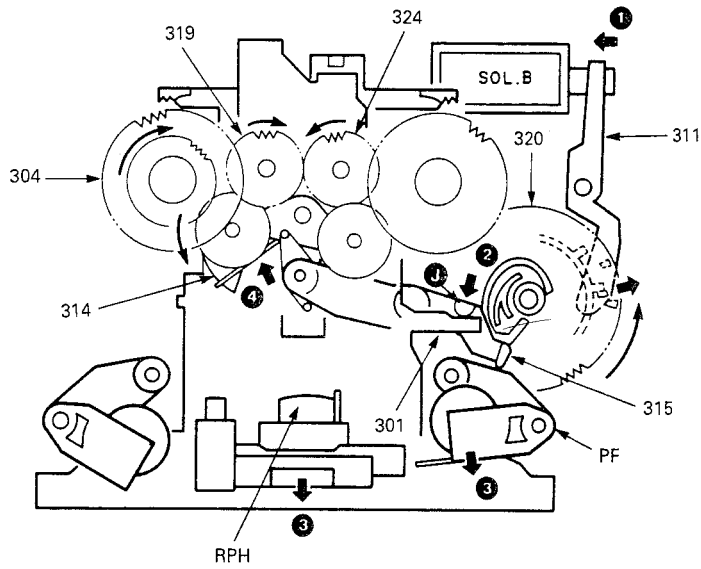

Fig. 11

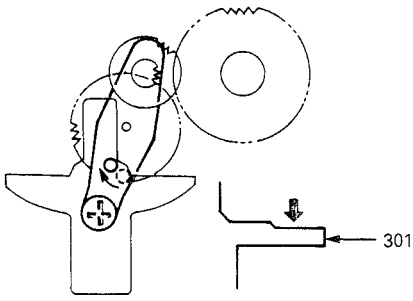

Fig. 12 CUE/REVIEW

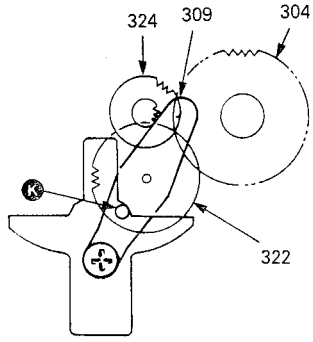

Fig. 13 PLAY

MECHANISM OPERATION DESCRIPTION

9. CUE/REVIEW→PLAY operation

When the SOL. B is turned ON, the trigger arm FR (311) moves in the direction of the arrow ❶, so the boss Ⓕ is moved in the direction of the arrow ❷ and released from the stopper Ⓖ. As the cam of the FR cam gear (320) is kept pushed in the direction of the arrow ❸ by the FR shift arm (315), the gear continues rotation until the boss Ⓕ comes in contact with the stopper Ⓗ.

When the FR shift arm (315) moves in the direction of the arrow ❸, the select arm (308) is moved down in the direction of the arrow, and the FR arm (314) is released from the reel.

As the head chassis (301) is no longer pushed by the boss Ⓙ of the FR shift arm (315), the chassis also moves up, the pinch roller is pushed against the capstan, the tape against the head, and the play operation starts.

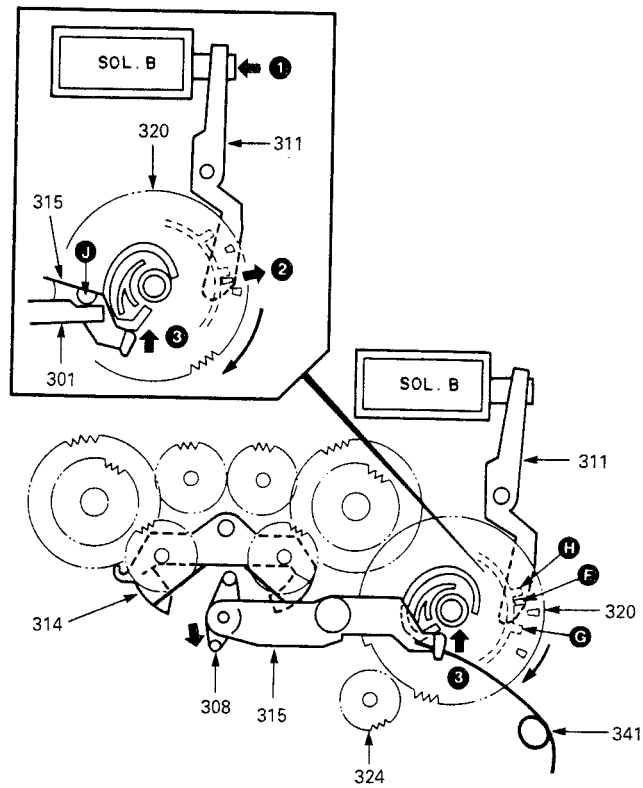

Fig. 14

MECHANISM OPERATION DESCRIPTION

10. FWD ↔ RVS switching

10-1 When the play cam gear (321) starts rotation in the direction of the arrow ❸, the boss Ⓜ of the RV lever A (307) moves to the left and right along the shape of the cam. Finally, when the play cam gear (321) has rotated by a 1/4 turn, one of the two tracks is selected.
The track to be selected is dependent on the operation of the SOL. A.

FWD direction

The SOL. A is turned OFF immediately after it is turned ON.
As the RV lever A (307) which is pulled by the spring (336) is in the FWD position, the boss Ⓜ moves along the outer track.
Because the RV lever A (307) and RV lever B (306) are connected as shown in the illustration, the RV lever B (306) also comes in the FWD position. The RV arm (310) and play gear arm (306), which are operated by the projection on the RV lever B (306), are moved in the directions of the arrows ❷ ❸, so the play gear (322) in the FWD mode is meshed with the Reel Ass'y (304) and clutch gear (324), rotating the Reel Ass'y in the FWD direction.
At this time, the head is also put in the FWD direction (position shown in the illustration) by the head select gear (329).

RVS direction

The SOL. A is maintained ON for a while after it is turned ON. Therefore, the TR Arm Ass'y (312) moves in the direction of the arrow ❷ as shown in the illustration, and the RV lever A (307) is pushed by it and moves in the RVS direction.

10-2 The boss Ⓜ on the RV lever A (307) moves along the inner track shown in the illustration, so the RV lever A (307) is fixed in the RV position shown in the illustration. The RV lever B (306) is also put in the RVS position shown in the illustration. As the projection on the RV lever B moves the RV arm (310) and play gear arm in the directions of the arrows ❷ ❸, the play gear (322) in the RVS mode is meshed with the REW gear (319) and Reel Ass'y (304), rotating the Reel Ass'y (304) in the RVS direction. At this time, the head is also put in the RVS direction by the head select gear (329).

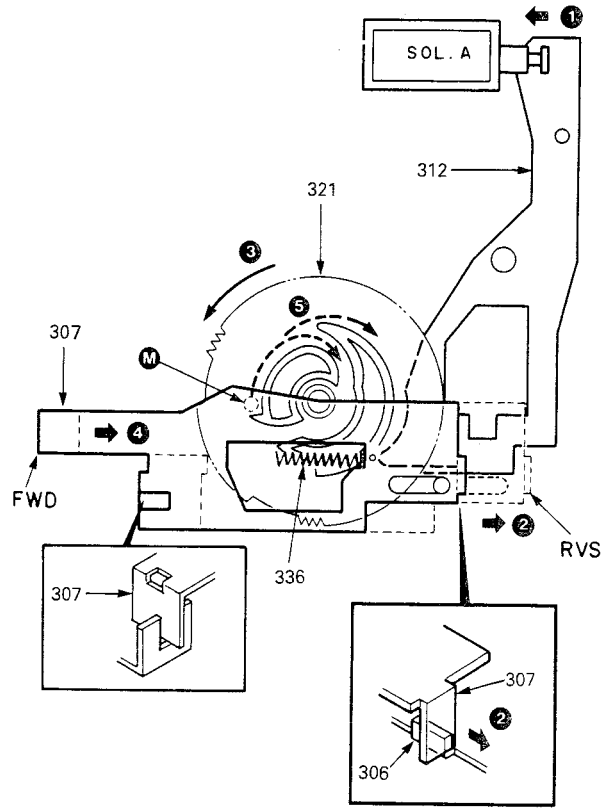

Fig. 15 (Rear perspective)

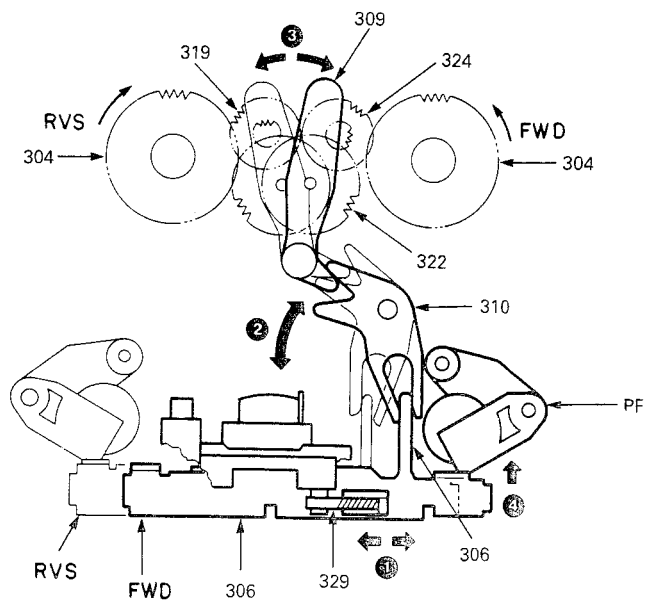

Fig. 16

ADJUSTMENT

Preparation for adjustment

(1) When using the A-711 and GE-711

Apply the signal generator (AG) output to the DAT/LD IN sockets of the GE-711. Connect the REC output to the DAT/LD OUT sockets of the GE-711.
Check the recording by setting the amplifier selector appropriately.

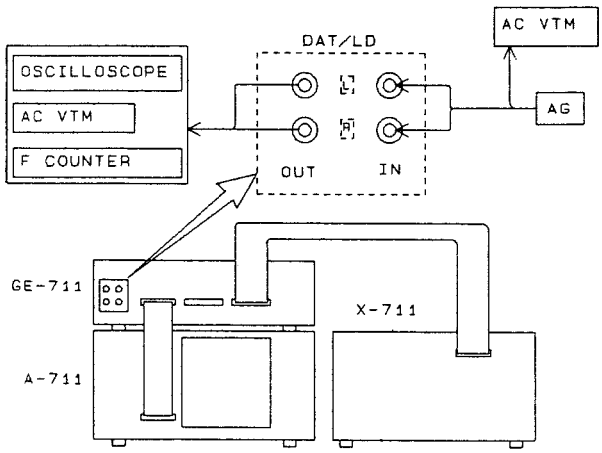

(2) When RM-90PS is used

Use the PLAY/REC socket in the same way as with the normal deck.

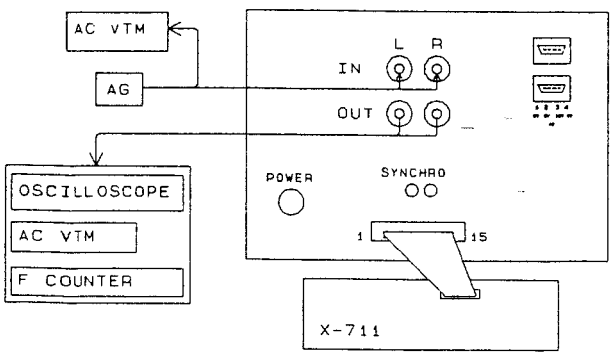

(3) To connect to the PC board directly

Apply 15 VAC directly from the power transformer. Supply input/output signals from the jumper on each signal line with a clip.

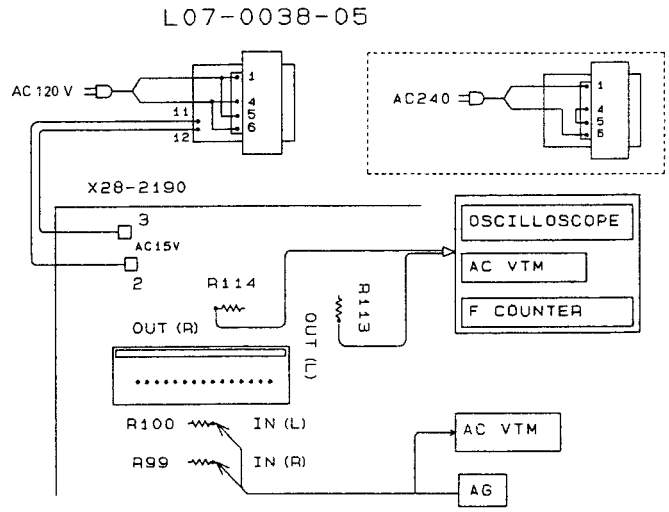

(4) Apply 15 VAC and each signal with a 15-pin connector.

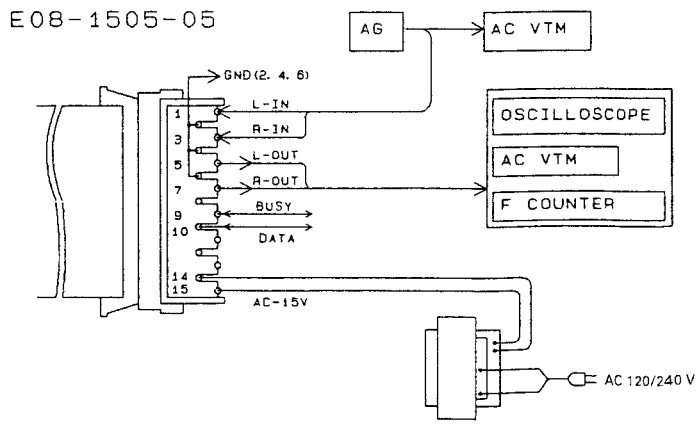

ADJUSTMENT

Step	Item	Input setting	Output setting	Cassette deck setting	Adjustment point	Adjustment	Figure
Set each switch as follows unless otherwise specified: TAPE switch: NORMAL DOLBY switch: OFF INPUT switch: LINE I. Cassette deck mechanical assembly (record/playback head adjustment)						0 dBs=0.775 V	
[1]	Demagnetizing and cleaning	—	—	Power: Off Demagnetizing Cleaning PLAY	Recording head Erase head Capstans Pinch rollers	Demagnetize the record/playback head with a head eraser. Clean the record/playback head, erase head, capstans, and pinch rollers with a cotton swab moistened with alcohol.	
[2]	Record/playback head azimuth	SCC-1727 TCC-153 MTT-114 10 kHz, −10 dB	(1—4)	PLAY	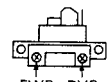	Maximize theoutput level and turn the azimuth adjustment screw so that the Lissajous figure on the oscilloscope is at 45-degrees (near linear).	
II. PC board adjustment (D40-0941/0942) Note: First adjust at HI speed.							
<1>	Tape speed (×2)	TCC-110 MTT-111 SCC-1727 3 kHz	(1—4)	Strap between the test point and ground.	VR102 (A) VR202 (B)	Set the frequency to 6 kHz at the tape center.	
<2>	Tape speed (normal)		(1—4)	Open between the test point and ground.	VR101 (A) VR201 (B)	Set the frequency to 3 kHz at the tape center.	
				TP 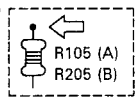			
III. PB board adjustment (X28-2190)							
<1>	Playback level	MTT-150 400 Hz	(1) GE OFF selector TAPE	(2—4)	PLAY	A DECK: VR1 (L) VR2 (R) B DECK: VR3 (L) VR4 (R)	Set the playback output level to −6.0 dB.	
		MTT-256 SCC-1727 315 Hz					Set the playback output level to −9.0 dB.	
		MTT-256U, TCC-160 315 Hz					Set the playback output level to −5.0 dB.	
<2>	Bias current	Press the CRLS key for more than three seconds without input and set the volume control to −15 dB. Adjust AG so that the deck output is 1 kHz at −30 dB. (ACC-223) 1 kHz/10 kHz	(1) GE OFF selector DAT/LD TAPE	(2—4)	REC I PLAY	VR7 (L) VR8 (R)	Alternately record the 1 kHz and 10 kHz signals and adjust the bias current controls so that the playback level is the same in each case.	
<3>	Recording level	Adjust AG so that the deck output is 1 kHz at −10 dB.		(2—4)	Record and play back a 1 kHz signal in the step 2 state.	VR5 (L) VR6 (R)	Set the playback output to −9 dB.	

REGLAGE

Mesure	Item	Réglage d'entrée	Réglage de sortie		Réglage de platine à cassette	Point de réglage	Réglage	Figure
Régler chaque commutateur sur les positions suivantes, à moins de spécification contraire: Commutateur de bande TAPE: NORMAL Commutateur DOLBY: OFF Commutateur d'entrée INPUT: LINE								0 dBs=0,775 V
I. Assemblage mécanique de la platine à cassette (réglage tête enregistrement/lecture)								
[1]	Démagnétisation et nettoyage	—	—		Alimentation: Off (arrêt) Démagnétisation Nettoyage LECTURE (PLAY)	Tête enregistrement Tête d'effacement Cabestans Galets presseurs	Démagnétiser la tête d'enregistrement/lecture avec un dispositif d'effacement pour tête. Nettoyer la tête d'enregistrement/lecture, la tête d'effacement, les cabestans et les galets presseurs avec un tampon imbibé d'alcool.	
[2]	Azimut de la tête d'enregistrement/ lecture	SCC-1727 TCC-153 MTT-114 10 kHz, −10 dB	(1—4)		PLAY	FWD RVS	Maximaliser le niveau de sortie et tourner la vis de réglage d'azimut de telle manière que la figure Lissajous sur l'oscilloscope soit à 45 degrés (presque linéaire)	
II. Réglage du CI (D40-0941/0942) Note: Régler tout d'abord à deux fois la vitesse normale.								
<1>	Vitesse de défilement de la bande (×2)	TCC-110 MTT-111 SCC-1727 3 kHz	(1—4)		Attacher entre le point d'essai et la masse.	VR102 (A) VR202 (B)	Régler la fréquence au centre de la bande sur 6 kHz	
<2>	Vitesse de défilement de la bande (normale)		(1—4)		Ouvrir entre le point d'essai et la masse.	VR101 (A) VR201 (B)	Régler la fréquence au centre de la bande sur 3 kHz.	
					TP R105 (A) R205 (B)			
III. Réglage de la plaquette de CI (X28-2190)								
<1>	Niveau de lecture	MTT-150 400 Hz	(1) Bande sélecteur OFF (arrêt) GE	(2—4)	PLAY	A DECK: VR1 (L) VR2 (R) B DECK: VR3 (L) VR4 (R)	Régler le niveau de sortie de lecture sur −6,0 dB.	
		MTT-256 SCC-1727 315 Hz					Régler le niveau de sortie de lecture sur −9,0 dB.	
		MTT-256U, TCC-160 315 Hz					Régler le niveau de sortie de lecture sur −5,0 dB	
<2>	Courant de polarisation	Presser la touche CLRS pendant plus de trois secondes sans entrée et régler la commande de volume sur −15 dB. Régler AG de telle manière que la sortie de la platine soit de 1 kHz sur −30 dB. (ACC-223) 1 kHz/10 kHz	(1) GE OFF Sélecteur DAT/TAPE LD	(2—4)	REC I PLAY	VR7 (L) VR8 (R)	Enregistrer tour à tour les signaux 1 kHz et 10 kHz et régler les commandes de courant de polarisation de telle manière que le niveau de lecture soit le même dans chaque cas.	
<3>	Niveau d'enregistrement	Régler AG de telle manière que la sortie de la platine soit de 1 kHz sur −10 dB.		(2—4)	Enregistrer et reporduire un signal de 1 kHz dans la condition de la mesure 2.	VR5 (L) VR6 (R)	Régler la sortie de lecture sur −9 dB.	

ABGLEICH

Stufe	Gegenstand	Eingabe Stellung	Ausgabe Stellung	Cassettenrecorder Stellung	Einstellungspunkt	Einstellung	Abbildung
Stellen Sie alle Schalter in folgende Positionen, außer es ist andersweitig spezifiziert: BANDschalter: NORMAL DOLBYschalter: AUS EINGABEschalter: LINIE							0 dBs=0,775 V
I. Mechanische Zusammensetzung des Cassettenrecorders (Aufnahme/Wiedergabe Kopf Einstellung)							
[1]	Entmagnetisierung und Reinigung	—	—	Strom: Aus Entmagnetisierung Reinigung WIEDERGABE	Aufnahme Kopf Löschkopf Bandantrieb Drückrollen	Entmagnetisieren Sie den Aufnahme/Wiedergabe Kopf mit einem Löschkopf. Säubern Sie den Aufnahme/Wiedergabe Kopf, Löschkopf, Bandantrieb und die Drückrollen mit einem in Alkohol getränktem Wattebausch.	
[2]	Aufnahme/Wiedergabe Kopf Scheitelkreis	SCC-1727 TCC-153 MTT-114 10 kHz, −10 dB	(1—4)	PLAY	FWD RVS	Maximieren Sie die Ausgabe Höhe und drehen Sie die Scheitelkreis-Einstellungsschraube so, daß die Lissajous Abbildung auf dem Oscillografen in einem 45-Grad Winkel steht (beinahe Linear).	
II. Gedruckte Schaltungsplatte Einstellung (D40-0941/0942) Hinweis: Die Geschwindigkeit anfänglich auf das zweifache des normalen stellen.							
<1>	Bandgeschwindigkeit (×2)	TCC-110 MTT-111 SCC-1727 3 kHz	(1—4)	Riemen zwischen Testpunkt und Boden.	VR102 (A) VR202 (B)	Die Frequenz in der Bandmitte auf 6 kHz stellen.	
<2>	Bandgeschwindigkeit (normal)		(1—4)	Zwischen Testpunkt und Boden öffnen.	VR101 (A) VR201 (B)	Die Frequenz in der Bandmitte auf 3 kHz stellen.	
				TP R105 (A) R205 (B)			
III. Gedruckte Schaltungsplatte Einstellung (X28-2190)							
<1>	Abspielhöhe	MTT-150 400 Hz	(1) GE Aus Wahlband	(2—4)	PLAY	A DECK: VR1 (L) VR2 (R) B DECK: VR3 (L) VR4 (R)	Die Abspiel-Ausgabe Höhe auf −6,0 dB stellen.
		MTT-256 SCC-1727 315 Hz					Die Abspiel-Ausgabe Höhe auf −9,0 dB stellen.
		MTT-256U, TCC-160 315 Hz					Die Abspiel-Ausgabe Höhe auf −5,0 dB stellen.
<2>	Vorspannung	Die CLRS Tasten für mehr als drei Sekunden ohne Eingabe betätigen, und den Lautstärkeregler auf −15 dB stellen. Die AG so einstellen, daß die Recorder Ausgabe 1 kHz bei −30 dB beträgt. (ACC-223) 110 Hz/10 kHz	(1) GE AUS Wahlband DAT/LD	(2—4)	REC I PLAY	VR7 (L) VR8 (R)	Die 1-kHz und 10-kHz Signale alternierend aufnehmen, und die Vorspannungskontrolle so einstellen, daß die Abspielstärke die gleiche ist, in beiden Fällen.
<3>	Aufnahmehöhe	Die AG so einstellen, daß die Recorder Ausgabe 1 kHz bei −10 dB beträgt.		(2—4)	Aufnahme und Wiedergabe eines 1 kHz Signals in Stufe 2.	VR5 (L) VR6 (R)	Die Wiedergabenstärke auf −9 dB stellen.

WIRING DIAGRAM

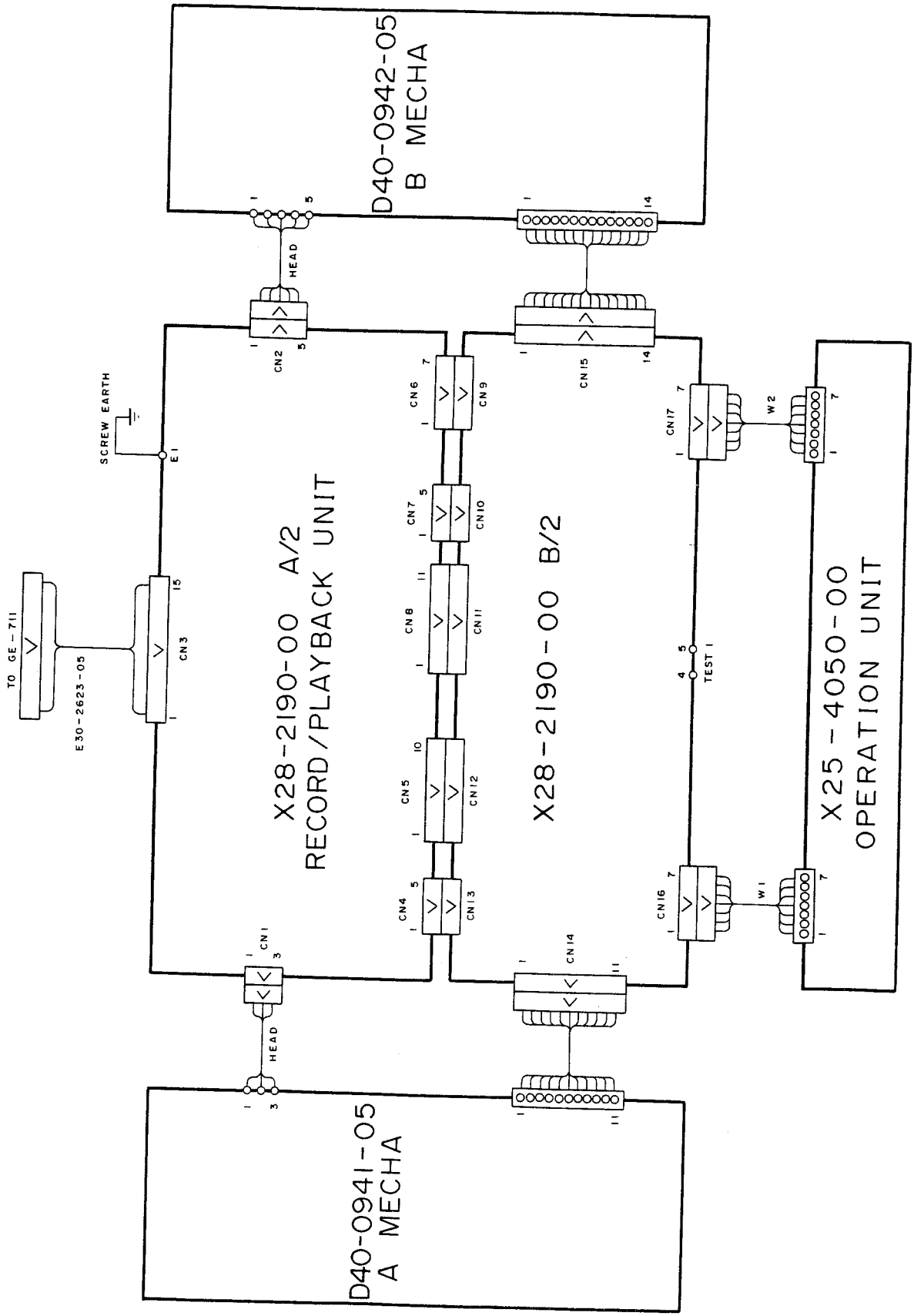

PC BOARD (Component Side View)

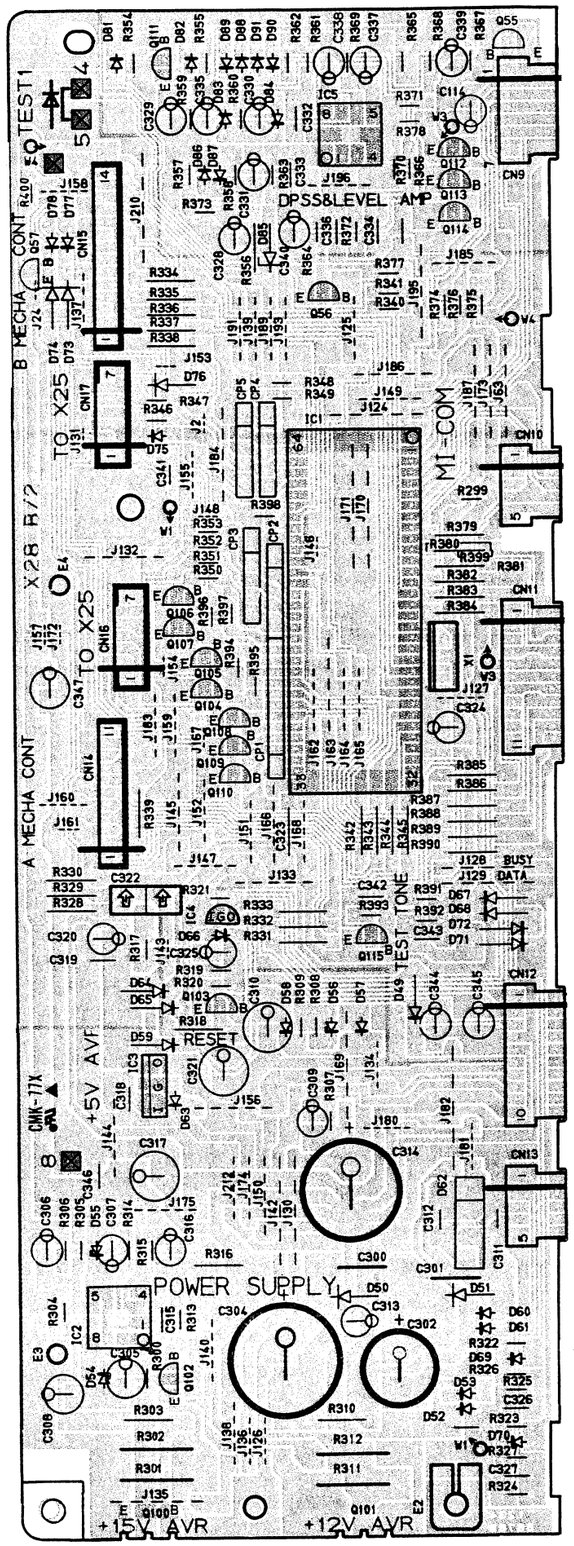

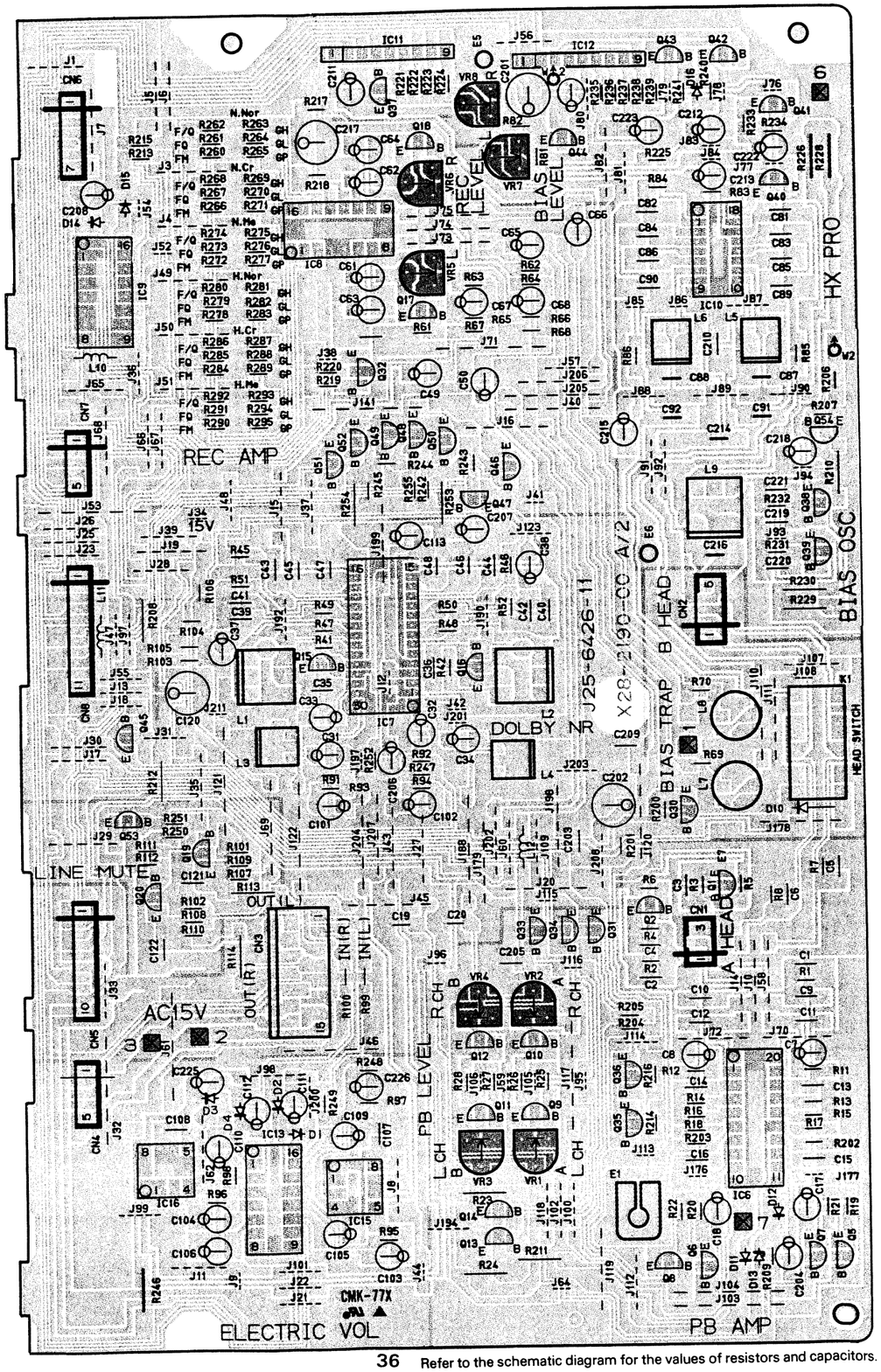

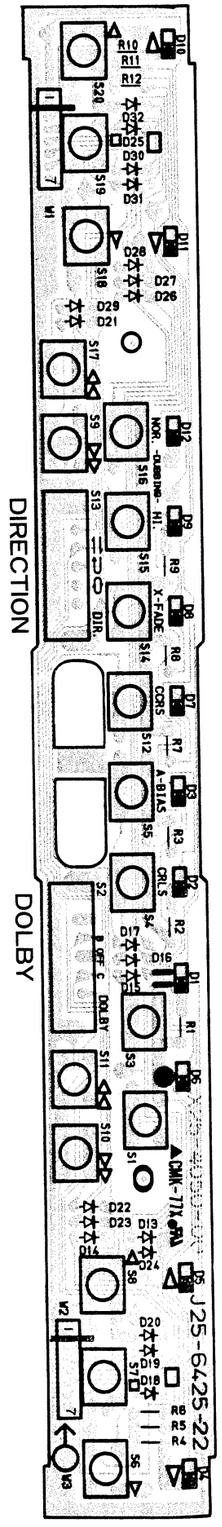

36 Refer to the schematic diagram for the values of resistors and capacitors.

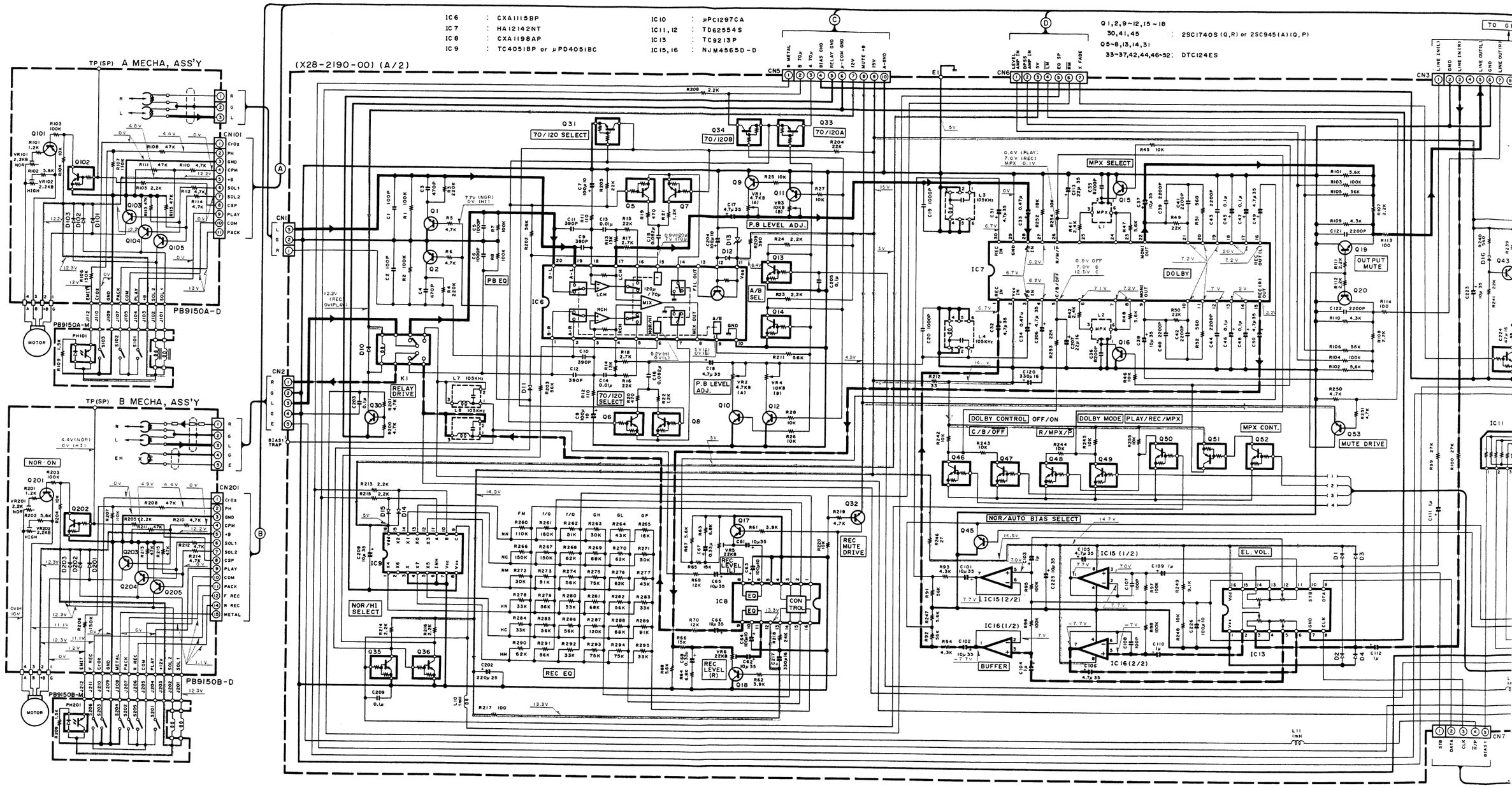

2SA733(A)
2SC2878
2SC3246
2SC945(A)
2SD1302
2SD863

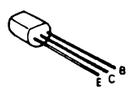

DTC124ES

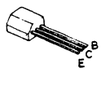

2SD1266

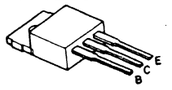

DTA124ES
2SA933S
2SC1740S

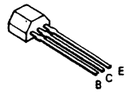

2SB941

NJM4558D

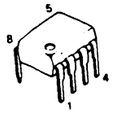

CXA1198AP

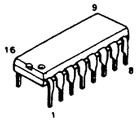

TC4051BP
TC9213P
UPD4051BC

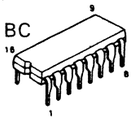

TD62554S

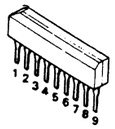

CXA1115BP

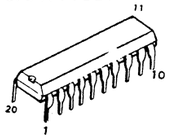

NJM4565D-D

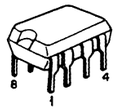

UPC78

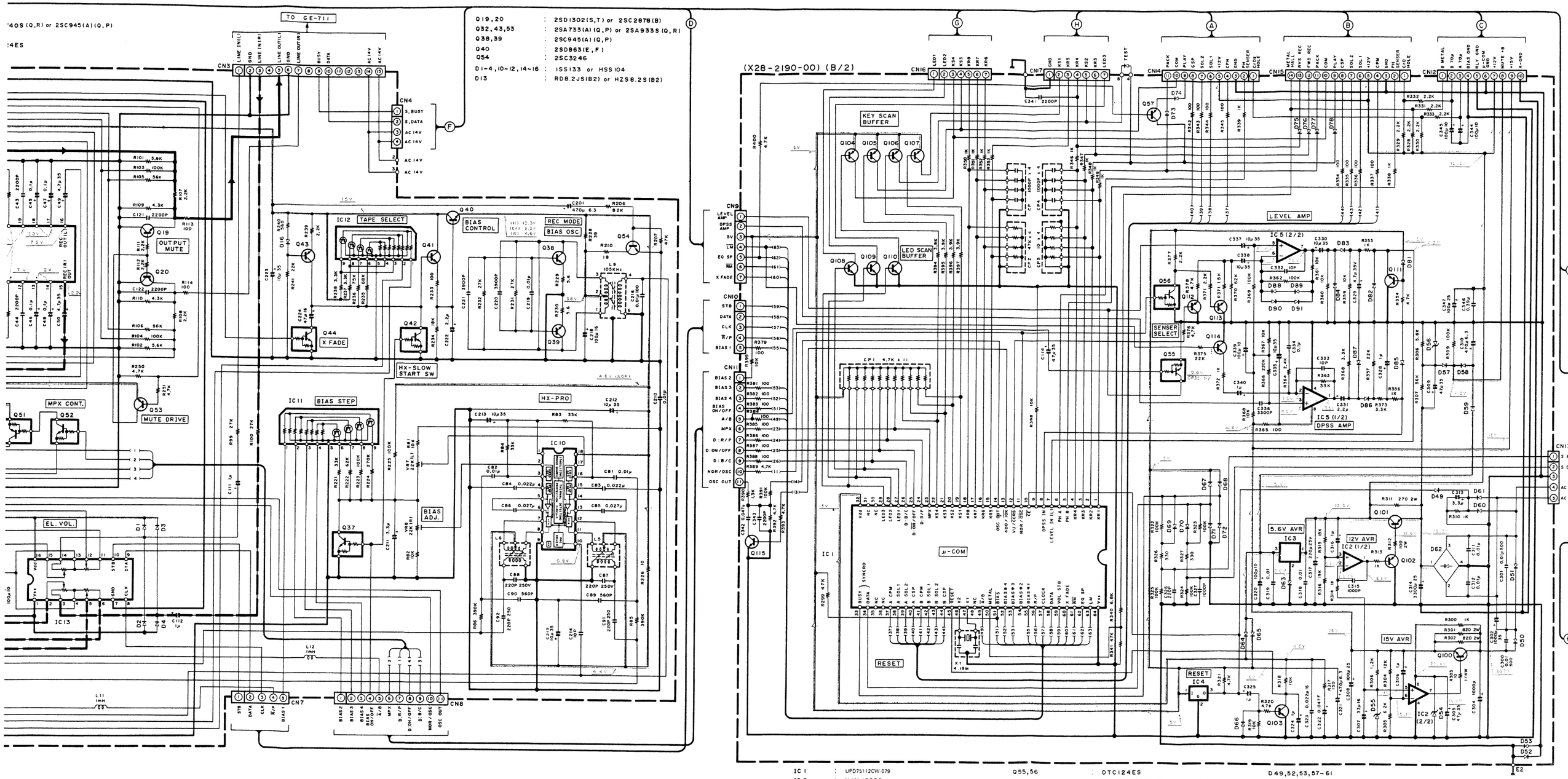

Q19,20	:	2SD1302(S,T) or 2SC2878(B)
Q32,43,53	:	2SA733(A)(Q,P) or 2SA933S(Q,R)
Q38,39	:	2SC945(A)(Q,P)
Q40	:	2SD863(E,F)
Q54	:	2SC3246
D1~4,10~12,14~16	:	1SS133 or HSS104
D13	:	RD8.2JS(B2) or HZS8.2S(B2)

IC1	:	UPD75112CW-079	Q55,56	:	DTC124ES	D49,52,53,57~61			D54	:	RD30ES(B2) or HZS30N(B2)
IC2	:	NJM4558D	Q57	:	2SA733(A)(Q,P) or 2SA933S(Q,R)	63~78,81~84			D55	:	RD5.1JS(B2) or HZS5.1S(B2)
IC3	:	UPC7805HF	Q100	:	2SD1266(Q,P)	86~91	:	1SS133 or HSS104	D56	:	RD5.6ES(B2) or HZS5.6N(B2)
IC4	:	M51951ASL or PST529D	Q101	:	2SB941(Q,P)	D50	:		D62	:	KBP02ML-6127
IC5	:	NJM4558D	Q102,104,111	:	2SA733(A)(Q,P) or 2SA933S(Q,R)	D51	:		D85	:	RD5.1ES(B2) or HZS5.1N(B2)
			Q103,108~110,112~115	:	2SC1740S(A)(Q,R) or 2SC945(A)(Q,P)						

CXA1115BP

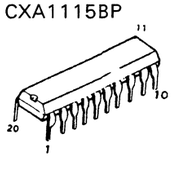

NJM4565D-D

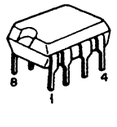

UPC7805HF

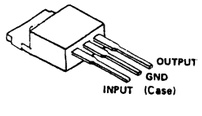

M51951ASL
PST529D

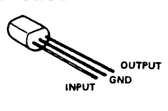

HA12142NT

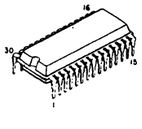

UPC1297CA

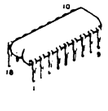

DC voltages are as measured with a high impedance voltmeter with a cassette loaded at playback mode. Values may vary slightly due to variations between individual instruments or/and units. Bias circuit DC voltages are as measured while in the record mode.

Les tensions c.c. doivent être mesurées avec un voltmètre à hautes impédances, une cassette étant insérée en mode de lecture. Les valeurs peuvent différer légèrement en fonction des variations inhérentes aux appareils et aux instruments de mesure individuels.
Les tensions c.c. du circuit de polarité doivent être mesurées l'appareil étant en mode d'enregistrement.

[illegible]

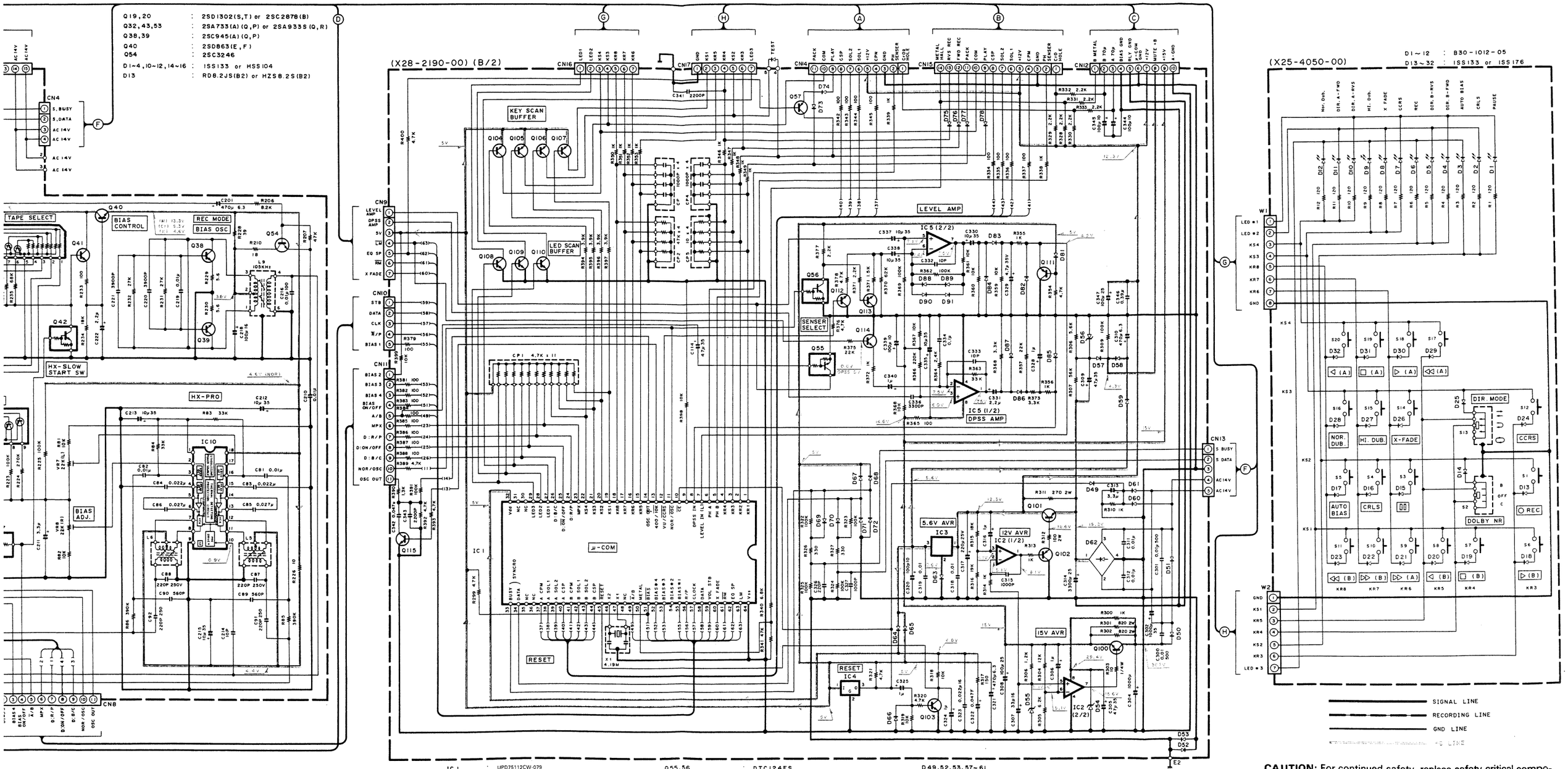

IC 1	: UPD75112CW-079	Q55,56	: DTC124ES	D49,52,53,57~61				D54	: RD30ES(B2) or HZS30N(B2)
IC 2	: NJM4558D	Q57	: 2SA733(A)(Q,P) or 2SA933S(Q,R)	63~78,81~84				D55	: RD5.1JS(B2) or HZS5.1S(B2)
IC 3	: UPC7805HF	Q100	: 2SD1266(Q,P)	86~91	:	1SS133 or HSS104		D56	: RD5.6ES(B2) or HZS5.6N(B2)
IC 4	: M51951ASL or PST529D	Q101	: 2SB941(Q,P)	D50	:			D62	: KBP02ML-6127
IC 5	: NJM4558D	Q102,104,111	: 2SA733(A)(Q,P) or 2SA933S(Q,R)	D51	:			D85	: RD5.1ES(B2) or HZS5.1N(B2)
		Q103,108~110,112~115	: 2SC1740S(A)(Q,R) or 2SC945(A)(Q,P)						

CAUTION: For continued safety, replace safety critical components only with manufacturer's recommended parts (refer to parts list). ⚠ Indicates safety critical components. To reduce the risk of electric shock, leakage-current or resistance measurements shall be carried out (exposed parts are acceptably insulated from the supply circuit) before the appliance is returned to the customer.

M51951ASL
PST529D

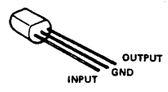

HA12142NT

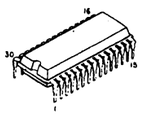

UPC1297CA

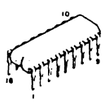

DC voltages are as measured with a high impedance voltmeter with a cassette loaded in playback mode. Values may vary slightly due to variations between individual instruments or/and units. Bias circuit DC voltages are as measured while in the record mode.

Les tensions cc. doivent être mesurées avec un voltmètre à haute impédance, une cassette étant insérée en mode de lecture. Les valeurs peuvent différer légèrement du fait des variations inhérentes aux appareils et aux instruments de mesure individuels.
Les tensions c.c. du circuit de polarité doivent être mesurées, l'appareil étant en mode d'enregistrement.

Die angegebenen Gleichspannungswerte wurden bei eingelegter Cassette in der Wiedergabe mit einem Hochohm-Spannungsmesser gemessen. Dabei können die Werte aufgrund von Unterschieden zwischen einzelnen Instrumenten oder Geräten u. U. geringfügig. Die angegebenen Gleichspannungswerte der Vormagnetisierungsschaltung wurden in der Aufnahme-Betriebsart gemessen.

Y26-3160-11

X-711

KENWOOD

X-711

EXPLODED VIEW (MECHANISM)

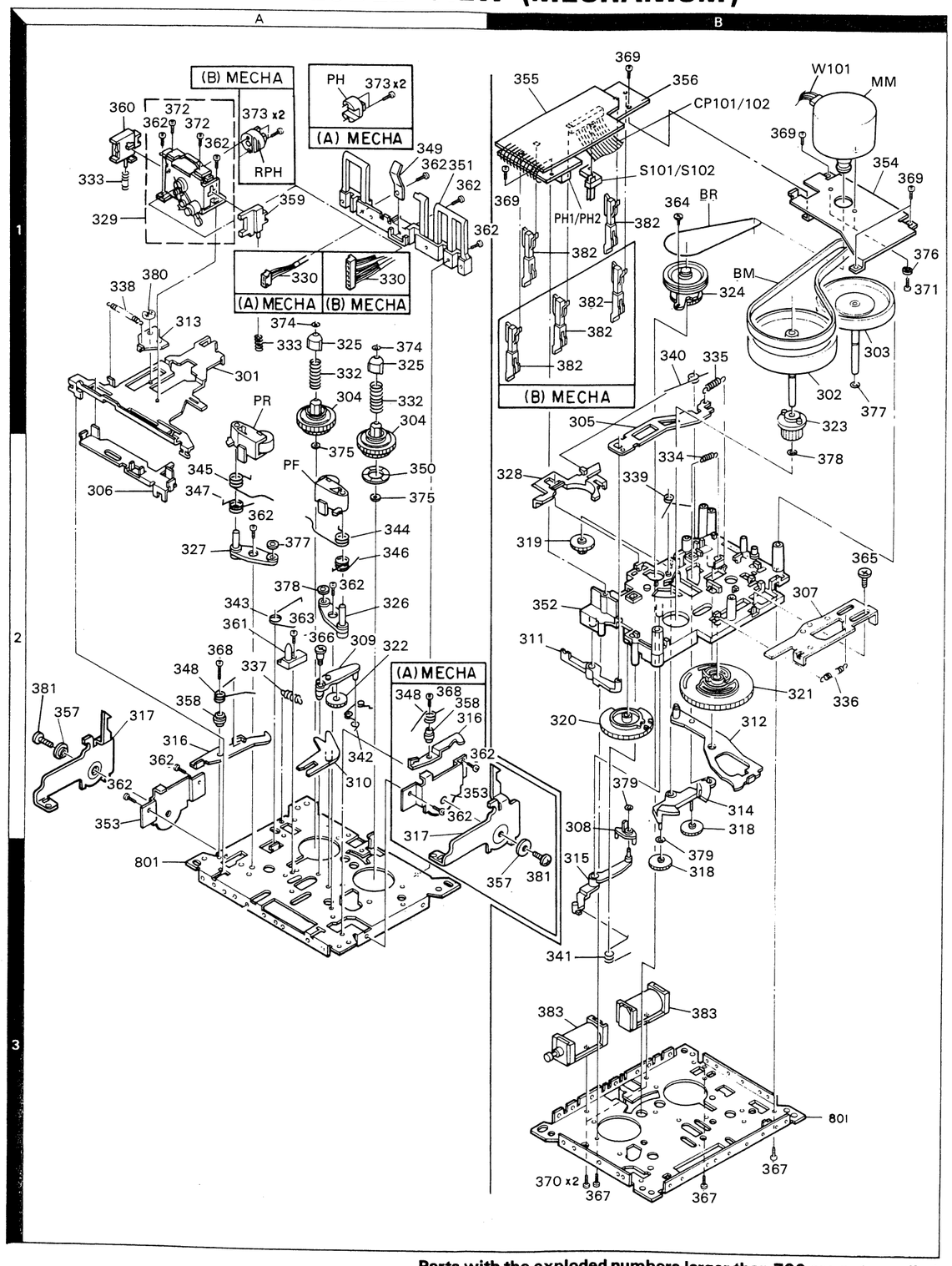

Parts with the exploded numbers larger than 700 are not supplied.

EXPLODED VIEW (UNIT)

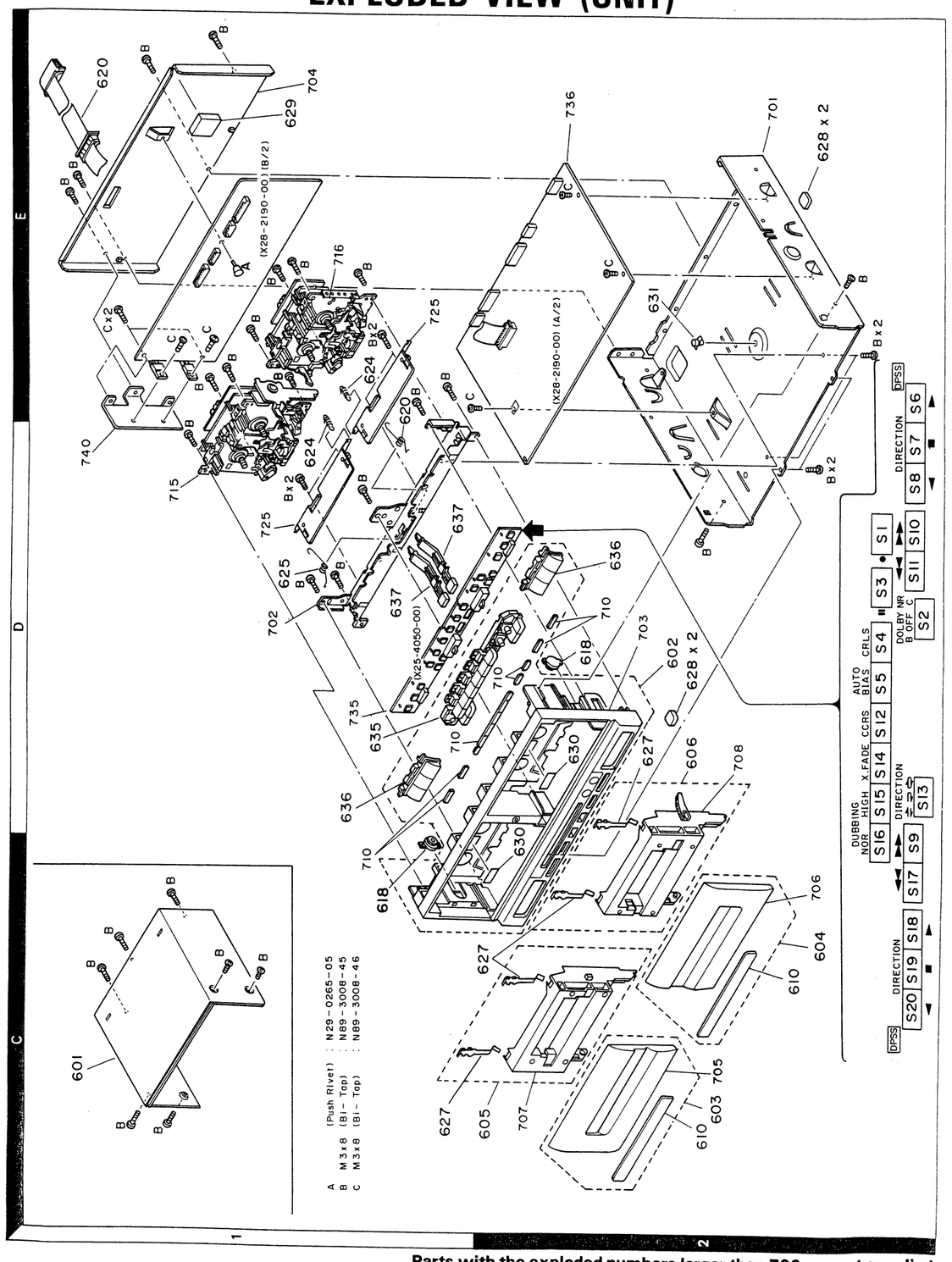

Parts with the exploded numbers larger than 700 are not supplied.

PARTS LIST

* New Parts
Parts without Parts No. are not supplied.
Les articles non mentionnes dans le Parts No. ne sont pas fournis.
Telle ohne Parts No. werden nicht geliefert.

Ref. No. 参照番号	Address 位置	New Parts 新	Parts No. 部品番号	Description 部品名／規格	Destination 仕向	Remarks 備考
X-711						
601	1C	*	A01-1837-01	METALLIC CABINET		
602	2C,2D	*	A20-6050-02	PANEL ASSY		
603	2C	*	A53-1224-03	CASSETTE LID ASSY		A
604	2C	*	A53-1226-03	CASSETTE LID ASSY		B
605	2C	*	A53-1228-03	CASSETTE HOLDER ASSY		A
606	2C,2D	*	A53-1230-03	CASSETTE HOLDER ASSY		B
610	2C	*	B10-1089-04	FRONT GLASS		
-			B46-0092-03	WARRANTY CARD	K	
-			B46-0094-03	WARRANTY CARD	Y	
-			B46-0095-03	WARRANTY CARD	Y	
-			B46-0096-13	WARRANTY CARD	X	
-			B46-0121-03	WARRANTY CARD	P	
-			B46-0122-13	WARRANTY CARD	E	
-			B46-0143-13	WARRANTY CARD	T	
618	1C,2D		D39-0176-05	DAMPER		
620	1E	*	E30-2623-05	CORD WITH CONNECTOR		
623	1D		G01-2331-04	EXTENSION SPRING		
624	1D,1E	*	G01-3323-04	EXTENSION SPRING		
625	1D	*	G01-2480-24	TORSION COIL SPRING		A
626	1E	*	G01-2481-24	TORSION COIL SPRING		B
627	1C,2C		G02-0943-04	FLAT SPRING		
628	2D,2E		G11-2017-04	CUSHION (FOOT)		
629	1E	*	G11-2027-04	CUSHION (18X18X8)		
630	2C,2D		G16-0132-04	SHEET		
-		*	H01-8815-04	ITEM CARTON CASE		
-		*	H10-5017-02	POLYSTYRENE FOAMED FIXTURE		
-		*	H10-5018-02	POLYSTYRENE FOAMED FIXTURE		
-		*	H20-0566-04	PROTECTION COVER	M	
-			H25-0232-04	PROTECTION BAG (235X350X0.03)	Y	
-		*	H25-0397-04	PROTECTION BAG	KPYXTE	
635	1D,2D	*	K29-3947-02	KNOB(SELECTOR)		
636	1D,2D	*	K29-3948-04	KNOB(E,R,STOP)		
637	1D	*	K29-3949-04	KNOB(EJECT)		
A	1E		N29-0268-05	PUSH RIVET		
B	1C,1E		N89-3008-45	BINDING HEAD TAPTITE SCREW		
C	1D,1E		N89-3008-46	BINDING HEAD TAPTITE SCREW		
CONTROL UNIT (X25-4050-00)						
D1 -12			B30-1012-05	LED(SLP-981C-50)		
S1			S40-1064-05	PUSH SWITCH REC		
S2			S31-1033-05	SLIDE SWITCH DOLBY		
S3 -12			S40-1064-05	PUSH SWITCH KEY BOARD		
S13			S31-1033-05	SLIDE SWITCH DIRECTION		
S14 -20			S40-1064-05	PUSH SWITCH KEY BOARD		
D13 -32			HSS104	DIODE		
D13 -32			1SS133	DIODE		
RECORD/PLAYBACK AMPLIFIER UNIT (X28-2190-00)						
C1 ,2			CC45FSL1H101J	CERAMIC 100PF J		
C3 ,4			CK45FB1H471K	CERAMIC 470PF K		

E: Scandinavia & Europe K: USA P: Canada
Y: PX(Far East, Hawaii) T: England M: Other Areas
Y: AAFES(Europe) X: Australia

A: A DACK
B: B DACK

⚠ indicates safety critical components.

PARTS LIST

⋇ New Parts
Parts without Parts No. are not supplied.
Les articles non mentionnes dans le Parts No. ne sont pas fournis.
Teile ohne Parts No. werden nicht geliefert.

Ref. No. 参照番号	Address 位置	New Parts 新	Parts No. 部品番号	Description 部品名／規格			Destination 仕向	Remarks 備考
C5 ,6			CF92FV1H102J	MF	1000PF	J		
C7 ,8			CE04KW1A101M	ELECTRO	100UF	10WV		
C9 -12			CK45FB1H391K	CERAMIC	390PF	K		
C13 ,14			CF92FV1H103J	MF	0.010UF	J		
C15 ,16			CF92FV1H823J	MF	0.082UF	J		
C17 ,18			CE04KW1V4R7M	ELECTRO	4.7UF	35WV		
C19 ,20			CF92FV1H102J	MF	1000PF	J		
C31 ,32			CE04KW1V4R7M	ELECTRO	4.7UF	35WV		
C33 ,34			CE04KW1HR47M	ELECTRO	0.47UF	50WV		
C35 ,36			CF92FV1H822J	MF	8200PF	J		
C37 ,38			CE04KW1V100M	ELECTRO	10UF	35WV		
C39 -44			CF92FV1H222J	MF	2200PF	J		
C45 -48			CF92FV1H104J	MF	0.10UF	J		
C49 ,50			CE04KW1V4R7M	ELECTRO	4.7UF	35WV		
C61 ,62			CE04KW1V100M	ELECTRO	10UF	35WV		
C63 ,64			CE04KW1A101M	ELECTRO	100UF	10WV		
C65 ,66			CE04KW1V100M	ELECTRO	10UF	35WV		
C67 ,68			CE04KW1HR33M	ELECTRO	0.33UF	50WV		
C81 ,82			CF92FV1H103J	MF	0.010UF	J		
C83 ,84			CF92FV1H223J	MF	0.022UF	J		
C85 ,86			CF92FV1H273J	MF	0.027UF	J		
C87 ,88			C91-0359-05	POLYSTY	220PF	J		
C89 ,90			CK45FB1H561K	CERAMIC	560PF	K		
C91 ,92			C91-0359-05	POLYSTY	220PF	J		
C101,102			CE04KW1V100M	ELECTRO	10UF	35WV		
C103,104			CE04KW1H010M	ELECTRO	1.0UF	50WV		
C105,106			CE04KW1V4R7M	ELECTRO	4.7UF	35WV		
C107,108			CC45FSL1H101J	CERAMIC	100PF	J		
C109-112			CE04KW1H010M	ELECTRO	1.0UF	50WV		
C113			CE04KW1V220M	ELECTRO	22UF	35WV		
C120			CE04KW1C331M	ELECTRO	330UF	16WV		
C121,122			CF92FV1H222J	MF	2200PF	J		
C201			CE04KW0J471M	ELECTRO	470UF	6.3WV		
C202			CE04KW1E221M	ELECTRO	220UF	25WV		
C203			CF92FV1H104J	MF	0.10UF	J		
C204			CE04KW1A101M	ELECTRO	100UF	10WV		
C205			CF92FV1H104J	MF	0.10UF	J		
C206			CE04KW1V4R7M	ELECTRO	4.7UF	35WV		
C207			CE04KW1C220M	ELECTRO	22UF	16WV		
C208			CE04KW1V100M	ELECTRO	10UF	35WV		
C209			CF92FV1H104J	MF	0.10UF	J		
C210			CK45FF1H103Z	CERAMIC	0.010UF	Z		
C211			CE04KW1H3R3M	ELECTRO	3.3UF	50WV		
C212,213			CE04KW1V100M	ELECTRO	10UF	35WV		
C214			CC45FSL2H100D	CERAMIC	10PF	D		
C215			CE04KW1V100M	ELECTRO	10UF	35WV		
C216			CQ93HP2A103J	MYLAR	0.010UF	J		
C217			CE04KW1C331M	ELECTRO	330UF	16WV		
C218			CE04KW1V100M	ELECTRO	10UF	35WV		
C219			CF92FV1H103J	MF	0.010UF	J		
C220,221			CF92FV1H392J	MF	3900PF	J		
C222			CE04KW1H2R2M	ELECTRO	2.2UF	50WV		
C223			CE04KW1V100M	ELECTRO	10UF	35WV		
C224			CE04KW1C470M	ELECTRO	47UF	16WV		
C225			CE04KW1V100M	ELECTRO	10UF	35WV		

E: Scandinavia & Europe K: USA P: Canada
Y: PX(Far East, Hawaii) T: England M: Other Areas
Y: AAFES(Europe) X: Australia

⚠ indicates safety critical components.

PARTS LIST

* New Parts
Parts without Parts No. are not supplied.
Les articles non mentionnes dans le Parts No. ne sont pas fournis.
Teile ohne Parts No. werden nicht geliefert.

Ref. No. 参照番号	Address 位置	New Parts 新	Parts No. 部品番号	Description 部品名／規格	Destination 仕向	Remarks 備考
C226			CE04KW1A101M	ELECTRO 100UF 10WV		
C300,301			CK45FE2H103P	CERAMIC 0.010UF P		
C302			CE04KW1V102M	ELECTRO 1000UF 35WV		
C304			CE04KW1H102M	ELECTRO 1000UF 50WV		
C305			CE04KW1V470M	ELECTRO 47UF 35WV		
C306			CE04KW1H010M	ELECTRO 1.0UF 50WV		
C307			CE04KW1C330M	ELECTRO 33UF 16WV		
C308			CE04KW1E101M	ELECTRO 100UF 25WV		
C309			CE04KW1V470M	ELECTRO 47UF 35WV		
C310			CE04KW0J471M	ELECTRO 470UF 6.3WV		
C311,312			CK45FF1H103Z	CERAMIC 0.010UF Z		
C313			CE04KW1H3R3M	ELECTRO 3.3UF 50WV		
C314			CE04KW1E332M	ELECTRO 3300UF 25WV		
C315			CK45FB1H102K	CERAMIC		
C316			CE04KW1H010M	ELECTRO 1.0UF 50WV		
C317			CE04KW1E221M	ELECTRO 220UF 25WV		
C318,319			CF92FV1H103J	MF 0.010UF J		
C320			CE04KW1A101M	ELECTRO 100UF 10WV		
C321			CE04KW0J471M	ELECTRO 470UF 6.3WV		
C322		*	C90-1826-05	BACKUP 0.047F 5.5WV		
C323			C91-0085-05	CERAMIC 0.022UF N		
C324,325			CE04KW1H010M	ELECTRO 1.0UF 50WV		
C326			CC45FSL1H221J	CERAMIC 220PF J		
C327			CK45FB1H102K	CERAMIC		
C328			CE04KW1H010M	ELECTRO 1.0UF 50WV		
C329			CE04KW1V4R7M	ELECTRO 4.7UF 35WV		
C330			CE04KW1V100M	ELECTRO 10UF 35WV		
C331			CE04KW1H2R2M	ELECTRO 2.2UF 50WV		
C332,333			CC45FSL1H100D	CERAMIC 10PF D		
C334			CF92FV1H104J	MF 0.10UF J		
C335			CE04KW1V100M	ELECTRO 10UF 35WV		
C336			CF92FV1H332J	MF 3300PF J		
C337,338			CE04KW1V100M	ELECTRO 10UF 35WV		
C339			CE04KW1A101M	ELECTRO 100UF 10WV		
C340			CE04KW1H010M	ELECTRO 1.0UF 50WV		
C341			CK45FB1H222K	CERAMIC 2200PF K		
C342			CF92FV1H473J	MF 0.047UF J		
C343			CF92FV1H222J	MF 2200PF J		
C344,345			CE04KW1A101M	ELECTRO 100UF 10WV		
C346			CF92FV1H394J	MF 0.39UF J		
C347			CE04KW1E101M	ELECTRO 100UF 25WV		
L1 ,2			L79-0791-05	LC FILTER		
L3 ,4			L39-0145-05	LW OSCILLATING COIL		
L5 ,6			L32-0377-05	BIAS OSCILATING COIL		
L7 ,8			L39-0171-05	TRAP COIL		
L9			L32-0388-05	BIAS OSCILATING COIL		
L10 -12			L40-1021-14	SMALL FIXED INDUCTOR(1.0MH,K)		
X1			L78-0218-05	RESONATOR		
C	2E		N89-3008-46	BINDING HEAD TAPTITE SCREW		
CP1		*	R90-0860-05	MULTIPLE RESISTOR		
CP2			R90-0202-05	MULTI-COMP 47KX4 J 1/6W		
CP3 ,4			R90-0478-05	MULTI-COMP 1000PX4 J 1/6W		
CP5			R90-0233-05	MULTI-COMP 10KX4 J 1/6W		

E: Scandinavia & Europe K: USA P: Canada
Y: PX(Far East, Hawaii) T: England M: Other Areas
Y: AAFES(Europe) X: Australia

⚠ indicates safety critical components.

PARTS LIST

* New Parts
Parts without Parts No. are not supplied.
Les articles non mentionnes dans le Parts No. ne sont pas fournis.
Teile ohne Parts No. werden nicht geliefert.

Ref. No. 参照番号	Address 位置	New Parts 新	Parts No. 部品番号	Description 部品名／規格	Destination 仕向	Remarks 備考
R212			RD14GB2E330J	FL-PROOF RD 33 J 1/4W		
R226			R92-0219-05	FUSE RESIST 10 G 1/4W		
R228		*	R92-0223-05	FUSE RESIST 39 G 1/4W		
R246			RD14GB2E270J	FL-PROOF RD 27 J 1/4W		
R301,302			RS14KB3D821J	FL-PROOF RS 820 J 2W		
R311			RS14KB3D271J	FL-PROOF RS 270 J 2W		
R312			RS14KB3D101J	FL-PROOF RS 100 J 2W		
VR1 ,2			R12-1089-05	TRIMMING POT.(4.7K)		
VR3 ,4			R12-3126-05	TRIMMING POT.(10K)		
VR5 -8			R12-3128-05	TRIMMING POT.(22K)		
K1			S51-2089-05	MAGNETIC RELAY		
D1 -4			HSS104	DIODE		
D1 -4			1SS133	DIODE		
D10 -12			HSS104	DIODE		
D10 -12			1SS133	DIODE		
D13			HZS8.2S(B2)	ZENER DIODE		
D13			RD8.2JS(B2)	ZENER DIODE		
D14 -16			HSS104	DIODE		
D14 -16			1SS133	DIODE		
D49			HSS104	DIODE		
D49			1SS133	DIODE		
D50 ,51			S5566B	DIODE		
D52 ,53			HSS104	DIODE		
D52 ,53			1SS133	DIODE		
D54			HZS30N(B)	ZENER DIODE		
D54			RD30ES(B)	ZENER DIODE		
D55			HZS5.1S(B2)	ZENER DIODE		
D55			RD5.1JS(B2)	ZENER DIODE		
D56			HZS5.6N(B2)	ZENER DIODE		
D56			RD5.6ES(B2)	ZENER DIODE		
D57 -61			HSS104	DIODE		
D57 -61			1SS133	DIODE		
D62			KBP02ML-6127	DIODE		
D63 -78			HSS104	DIODE		
D63 -78			1SS133	DIODE		
D81 -84			HSS104	DIODE		
D81 -84			1SS133	DIODE		
D85			HZS5.1N(B2)	ZENER DIODE		
D85			RD5.1ES(B2)	ZENER DIODE		
D86 -91			HSS104	DIODE		
D86 -91			1SS133	DIODE		
IC1		*	UPD75112CW-079	IC		
IC2			NJM4558D	IC(OP AMP X2)		
IC3			UPC7805HF	IC(VOLTAGE REGULATOR/ +5V)		
IC4			M51951ASL	IC(SYSTEM RESET)		
IC4			PST529D	IC		
IC5			NJM4558D	IC(OP AMP X2)		
IC6			CXA1115BP	IC(PLAY/BACK AMP)		
IC7			HA12142NT	IC(DOLBY B/C NOISE REDUCTION)		
IC8			CXA1198AP	IC(CASSETTE DECK REC EQUALIZER		
IC9			TC4051BP	IC(8CH MPX/ DE-MPX)		
IC9			UPD4051BC	IC(8CH MULTIPLEX/DEMULTIPLEXER		
IC10			UPC1297CA	IC(DOL HX PRO SYSTEM)		
IC11,12			TD62554S	IC(4CH TRANSISTOR ARRAY)		

E: Scandinavia & Europe K: USA P: Canada
Y: PX(Far East, Hawaii) T: England M: Other Areas
Y: AAFES(Europe) X: Australia

⚠ indicates safety critical components.

PARTS LIST

* New Parts
Parts without Parts No. are not supplied.
Les articles non mentionnes dans le Parts No. ne sont pas fournis.
Telle ohne Parts No. werden nicht geliefert.

Ref. No. 参照番号	Address 位置	New Parts 新	Parts No. 部品番号	Description 部品名／規格	Destination 仕向	Remarks 備考
IC13			TC9213P	IC(2CH ELECTRONIC VOLUME)		
IC15,16			NJM4565D-D	IC(OP AMP X2)		
Q1 ,2			2SC1740S(Q,R)	TRANSISTOR		
Q1 ,2			2SC945(A)(Q,P)	TRANSISTOR		
Q5 -8			DTC124ES	DIGITAL TRANSISTOR		
Q9 -12			2SC1740S(Q,R)	TRANSISTOR		
Q9 -12			2SC945(A)(Q,P)	TRANSISTOR		
Q13 ,14			DTC124ES	DIGITAL TRANSISTOR		
Q15 -18			2SC1740S(Q,R)	TRANSISTOR		
Q15 -18			2SC945(A)(Q,P)	TRANSISTOR		
Q19 ,20			2SC2878(B)	TRANSISTOR		
Q19 ,20			2SD1302(S,T)	TRANSISTOR		
Q30			2SC1740S(Q,R)	TRANSISTOR		
Q30			2SC945(A)(Q,P)	TRANSISTOR		
Q31			DTC124ES	DIGITAL TRANSISTOR		
Q32			2SA733(A)(Q,P)	TRANSISTOR		
Q32			2SA933S(Q,R)	TRANSISTOR		
Q33 -37			DTC124ES	DIGITAL TRANSISTOR		
Q38 ,39			2SC945(A)(Q,P)	TRANSISTOR		
Q40			2SD863(E,F)	TRANSISTOR		
Q41			2SC1740S(Q,R)	TRANSISTOR		
Q41			2SC945(A)(Q,P)	TRANSISTOR		
Q42			DTC124ES	DIGITAL TRANSISTOR		
Q43			2SA733(A)(Q,P)	TRANSISTOR		
Q43			2SA933S(Q,R)	TRANSISTOR		
Q44			DTC124ES	DIGITAL TRANSISTOR		
Q45			2SC1740S(Q,R)	TRANSISTOR		
Q45			2SC945(A)(Q,P)	TRANSISTOR		
Q46 -50			DTC124ES	DIGITAL TRANSISTOR		
Q51			DTA124ES	DIGITAL TRANSISTOR		
Q52			DTC124ES	DIGITAL TRANSISTOR		
Q53			2SA733(A)(Q,P)	TRANSISTOR		
Q53			2SA933S(Q,R)	TRANSISTOR		
Q54			2SC3246	TRANSISTOR		
Q56			DTC124ES	DIGITAL TRANSISTOR		
Q100			2SD1266(Q,P)	TRANSISTOR		
Q101			2SB941(Q,P)	TRANSISTOR		
Q102			2SA733(A)(Q,P)	TRANSISTOR		
Q102			2SA933S(Q,R)	TRANSISTOR		
Q103			2SC1740S(Q,R)	TRANSISTOR		
Q103			2SC945(A)(Q,P)	TRANSISTOR		
Q104-107			2SA733(A)(Q,P)	TRANSISTOR		
Q104-107			2SA933S(Q,R)	TRANSISTOR		
Q108-110			2SC1740S(Q,R)	TRANSISTOR		
Q108-110			2SC945(A)(Q,P)	TRANSISTOR		
Q111			2SA733(A)(Q,P)	TRANSISTOR		
Q111			2SA933S(Q,R)	TRANSISTOR		
Q112-115			2SC1740S(Q,R)	TRANSISTOR		
Q112-115			2SC945(A)(Q,P)	TRANSISTOR		
MECHANISM ASS'Y (D40-094X-XX)						
301	1A		A11-0610-08	SUB CHASSIS ASSY		
302	1B		D01-0108-08	FLYWHEEL ASSY		
303	1B		D01-0209-08	FLYWHEEL ASSY		
304	1A		D03-0276-08	REEL DISK ASSY		
305	1B		D10-2290-08	FE LEVER		

E: Scandinavia & Europe K: USA P: Canada
Y: PX(Far East, Hawaii) T: England M: Other Areas
Y: AAFES(Europe) X: Australia

⚠ indicates safety critical components.

PARTS LIST

* New Parts
Parts without Parts No. are not supplied.
Les articles non mentionnes dans le Parts No. ne sont pas fournis.
Teile ohne Parts No. werden nicht geliefert.

Ref. No. 参照番号	Address 位置	New Parts 新	Parts No. 部品番号	Description 部品名／規格	Destination 仕向	Remarks 備考
306	2A		D10-2291-08	RV LEVER		
307	2B		D10-2294-08	RV LEVER		
308	2B		D10-2296-08	SELECT ARM		
309	2A		D10-2297-08	PLAY ARM		
310	2A		D10-2298-08	RV ARM		
311	2B		D10-2299-08	FR ARM		
312	2B		D10-2300-08	TR ARM ASSY		
313	1A		D10-2301-08	ARM ASSY		
314	2B		D10-2302-08	FR ARM ASSY		
315	3B		D10-2303-08	ARM ASSY		
316	2A		D10-2304-08	EJECT LOCK ARM		A
316	2A	*	D10-2486-08	EJECT LOCK ARM		B
317	2A	*	D10-2435-04	EJECT LEVER		A
317	2A, 2B	*	D10-2436-04	EJECT LEVER		B
318	3B		D13-0789-08	FR GEAR		
319	2B		D13-0790-08	REW GEAR		
320	2B		D13-0791-08	FR GEAR		
321	2B		D13-0792-08	PL CAM GEAR		
322	2A		D13-0793-08	PLAY GEARCH		
323	1B		D13-0794-08	FLYWHEEL GEAR		
324	1B		D19-0255-08	CLUTCH ASSY		
325	1A		D19-0256-08	REEL CAP		
326	2A		D23-0244-08	RETAINER (R)		
327	2A		D23-0245-08	RETAINER (L)		
328	2B		D30-0023-08	BRAKE		
329	1A	*	T31-0062-08	HEAD BASE ASSY		A
329	1A	*	T39-0016-08	HEAD BASE ASSY		B
330	1A		E31-4862-08	CONNECTING WIRE (P/R HEAD)		B
330	1A		E31-4864-08	CONNECTING WIRE (PB HEAD)		A
332	1A		G01-2348-08	REEL SPRING		
333	1A		G01-2349-08	COMPRESSION COIL SP		
334	2B		G01-2350-08	TENSION COIL SP		
335	1B		G01-2351-08	TENSION COIL SP		
336	2B		G01-2352-08	TENSION COIL SP		
337	2A		G01-2353-08	TENSION COIL SP		
338	1A		G01-2354-08	TENSION COIL SP		
339	2B		G01-2355-08	TORSION COIL SP		
340	1B		G01-2356-08	BRAKE SPRING		
341	3B		G01-2357-08	TORSION COIL SP		
342	2A		G01-2358-08	TORSION COIL SP		
343	2A		G01-2359-08	TORSION COIL SP		
344	2A		G01-2360-08	TORSION COIL SP		
345	2A		G01-2361-08	TORSION COIL SP		
346	2A		G01-2362-08	TORSION COIL SP		
347	2A		G01-2363-08	TORSION COIL SP		
348	2A		G01-2364-08	TORSION COIL SP		B
348	2A		G01-2366-08	TORSION COIL SP		A
349	1A		G02-0913-08	FLAT SPRING		
350	2A		G16-0727-08	SHEET		
351	1A		J19-3131-08	SWITCH HOLDER		
352	2B		J19-3133-08	HOLDER ASSY		
353	2A	*	J21-5616-05	EJECT LEVER HOLDER		A
353	2A	*	J21-5617-05	EJECT LEVER HOLDER		B
354	1B	*	J21-5653-08	MOTOR HOLDER		
355	1B	*	J25-6497-08	DRIVE PCB		B

E: Scandinavia & Europe K: USA P: Canada
Y: PX(Far East, Hawaii) T: England M: Other Areas
Y: AAFES(Europe) X: Australia

A: A DACK
B: B DACK

⚠ indicates safety critical components.

PARTS LIST

* New Parts
Parts without Parts No. are not supplied.
Les articles non mentionnes dans le Parts No. ne sont pas fournis.
Telle ohne Parts No. werden nicht gellefert.

Ref. No. 参照番号	Address 位置	New Parts 新	Parts No. 部品番号	Description 部品名／規格	Destination 仕向	Remarks 備考
355	1B	*	J25-6499-08	DRIVE PCB		A
356	1B	*	J25-6498-08	MECHANISM CONTROL PCB		B
356	1B	*	J25-6500-08	MECHANISM CONTROL PCB		A
357	2A,2B		J31-0498-04	COLLAR		
358	2A		J31-0824-08	COLLAR		B
358	2A		J31-0825-08	COLLAR		A
359	1A		J90-0631-08	TAPE GUIDE (R)		
360	1A		J90-0632-08	TAPE GUIDE (L)		
361	2A		J90-0633-08	CASSETTE GUIDE		
362	1A,2A		N09-1496-08	SCREW (M 2X4)		
363	2A		N09-1497-08	SCREW (M 2X5)		
364	1B		N09-2653-08	SCREW		
365	2B		N09-2654-08	SCREW		
366	2A		N09-2655-08	SCREW		
367	3B		N09-2656-08	SCREW (M 2X8)		
368	2A		N09-2657-08	SCREW		
369	1B		N09-2658-08	SCREW		
370	3B		N09-2659-08	SCREW		
371	1B		N09-2660-08	SCREW (M 2.6X3)		
372	1A		N09-2661-08	SCREW		
373	1A		N09-2662-08	SCREW (AZIMUTH)		
374	1A		N19-1031-08	FLAT WASHER (φ 1.6X3.5X0.5)		
375	2A		N19-1198-08	FLAT WASHER (φ 2.6)		
376	1B		N19-1199-08	FLAT WASHER		
377	2A,1B		N19-1200-08	FLAT WASHER		
378	2A,1B		N19-1201-08	FLAT WASHER		
379	2B		N19-1202-08	FLAT WASHER		
380	1A		N29-0207-04	E-RING		
381	2A		N89-3008-45	BINDING HEAD TAPTITE SCREW		
382	1B		S46-1125-08	LEAF SWITCH (REC,METAL,CrO2)		
383	3B		T94-0215-08	SOLENOID		
BM	1B	*	D16-0308-08	MAIN BELT		
BR	1B		D16-0271-08	REEL BELT		
PF	2A		D14-0297-08	PINCH ROLLER ASSY		
PR	1A		D14-0298-08	PINCH ROLLER ASSY		
MM	1B		T42-0522-08	DC MOTOR ASSY		
PH	1A		T31-0054-08	PLAYBACK HEAD		A
RPH	1A	*	T39-0015-08	REC/PLAYBACK HEAD		B
CP101	1B	*	E31-7855-08	CONNECTING WIRE		A
CP201	1B	*	E31-7857-08	CONNECTING WIRE		B
W101	1B	*	E31-7856-08	MOTOR WIRE		
VR101			R12-1086-05	TRIMMING POT.		A
VR201			R12-1086-05	TRIMMING POT.		B
S101	1B	*	S46-1138-08	LEAF SWITCH		A
S201	1B	*	S46-1138-08	LEAF SWITCH		B
D101			S5566B	DIODE		A
D201			S5566B	DIODE		B
Q101			2SA733(A)	TRANSISTOR		A
Q102			DTC124ES	TRANSISTOR		A
Q103			2SC3246	TRANSISTOR		A
Q201			2SA733(A)	TRANSISTOR		B
Q202			DTC124ES	TRANSISTOR		B
Q203			2SC3246	TRANSISTOR		B

E: Scandinavia & Europe K: USA P: Canada
Y: PX(Far East, Hawaii) T: England M: Other Areas
Y: AAFES(Europe) X: Australia

A: A DACK
B: B DACK

⚠ indicates safety critical components.

PARTS LIST

⋇ New Parts
Parts without Parts No. are not supplied.
Les articles non mentionnes dans le Parts No. ne sont pas fournis.
Telle ohne Parts No. werden nicht gellefert.

Ref. No. 参照番号	Address 位置	New Parts 新	Parts No. 部品番号	Description 部品名／規格	Destination 仕向	Remarks 備考
PH101	1B		NJL5765K(A,B)	PHOTO REFRECTER		A
PH102	1B		NJL5765K(A,B)	PHOTO REFRECTER		B

E: Scandinavia & Europe K: USA P: Canada
Y: PX(Far East, Hawaii) T: England M: Other Areas
Y: AAFES(Europe) X: Australia

A : A DACK
B : B DACK

⚠ indicates safety critical components.

X-711

SPECIFICATIONS

Recording system ..... AC bias (Frequency: 105 kHz)
Heads **A Deck Playback head** 1
B Deck Playback/recording head 1
Erasing head 1
Motor **A Deck** 1
B Deck 1
Fast winding time ..... Approx. 90 seconds (C-60 tape)
Frequency response
Normal tape ..... 30 Hz — 18,000 Hz ±3 dB
CrO_2 tape ..... 30 Hz — 19,000 Hz ±3 dB
Metal tape ..... 30 Hz — 19,000 Hz ±3 dB
Signal to noise ratio
Dolby NR OFF ..... 58 dB (Metal tape)
Dolby B NR ON ..... 66 dB (Metal tape)
Dolby C NR ON ..... 73 dB (Metal tape)
Wow & flutter ..... 0.09% (W.R.M.S.)
±0.23% (DIN)
Input sensitivity/Impedance ..... Line × 77.5 mV/50 kΩ
Output level/Impedance ..... Line × 275 mV/2.2 kΩ
Dimensions ..... W: 270 mm (10-5/8")
H: 120 mm (4-3/4")
D: 254 mm (9-5/8")
Weight (Net) .....3.2 kg (7.04 lb)

KENWOOD follows a policy of continuous advancements in development.
For this reason specifications may be changed without notice.
DOLBY and the double-D symbol are trademarks of Dolby Laboratories Licensing Corporation. Noise reduction circuit made under license from Dolby Laboratories Licensing Corporation.

KENWOOD poursuit une politique de progrès constants en ce qui concerne le développement.
Pour cette raison, les spécifications sont sujettes à modifications sans préavis.
La marque DOLBY et le double "D" sont des marques déposées des Dolby Laboratories.
Le système de réduction du bruit de fond est fabriqué sous license des Dolby Laboratories.

KENWOOD strebt ständige Verbesserungen in der Entwicklung an.
Daher bleiben Änderungen der technischen Daten jederzeit vorbehalten.
DOLBY und Doppel-D-Symbol sind eingetragene Warenzeichen der Dolby Laboratories.
Dolby-Rauschunterdrückung mit Lizenz der Dolby Laboratories gefertigt.

Note:

Component and circuitry are subject to modification to insure best operation under differing local conditions. This manual is based on the U.S.A. (K) standard, and provides information on regional circuit modification through use of alternate schematic diagrams, and information on regional component variations through use of parts list.

KENWOOD CORPORATION